Edition des nomenclatures

Edité le 21/12/2017

Filtre(s) :

- type: **MOTEUR N4.140 STANDARD**

MOTEUR N4.140 STANDARD / ENGINE BLOCK

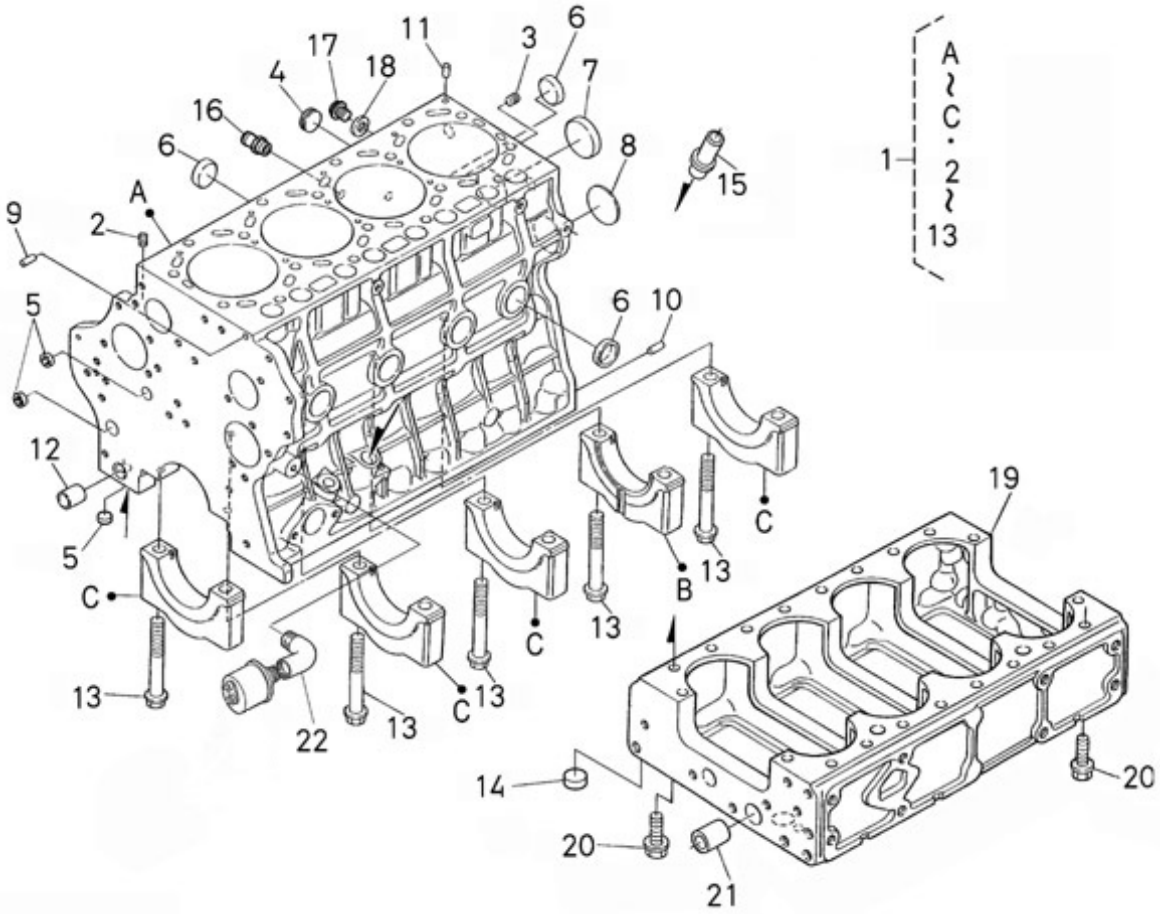

Part number	Item	Désignation article	Quantity
970313520	1	COMP.CRANKCASE	1
970490108	2	PLUG,SOCK	2
970310760	3	PLUG	3
970310311	4	PLUG	4
970302722	5	CAP,FREEZE	5
970301905	6	CAP,SEALING	6
970301906	7	CAP,FREEZE	7
970313521	8	PLUG,EXPANSION	8
970313522	9	PIN,STRAIGHT	9
970313523	10	PIN,STRAIGHT	10
970490112	11	PIN,PIPE	11
970310764	12	PIN	12
970310765	13	BOLT	13
970301905	14	CAP,SEALING	14
970313524	15	PIPE,OIL	15
970313525	16	GASKET,WATER PIPE	16
970313526	17	PLUG	17
970313527	18	GASKET	18
970313528	19	CRANKCASE	19
970313529	20	BOLT,FLANGE	20
970310770	21	PIN	21
970493207	22	ELBOW,1/8X10X1,5MF	22

MOTEUR N4.140 STANDARD / OIL SUMP - OIL PUMP

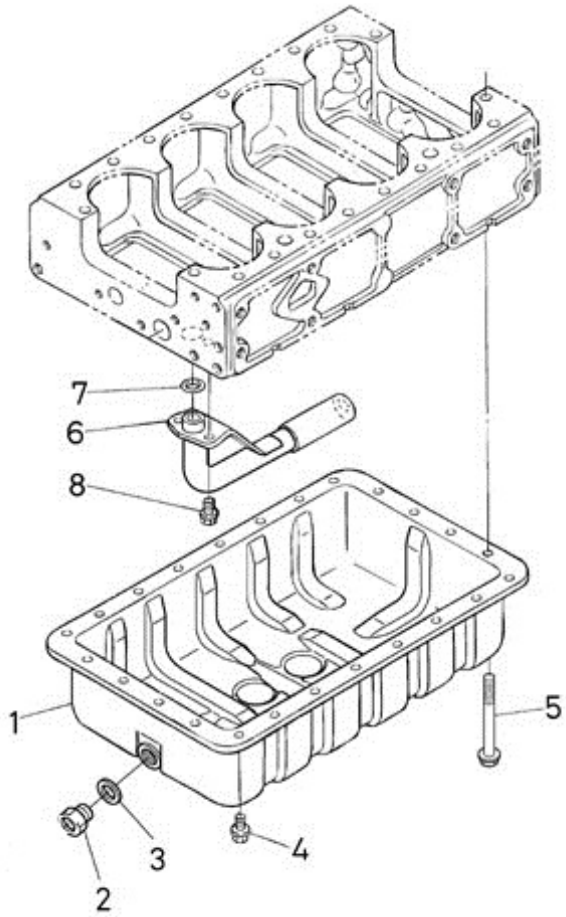

Part number	Item	Désignation article	Quantity
970313530	1	COMP.OIL PAN	1
970307674	2	NIPPLE	2
970313531	3	GASKET	3
970313532	4	BOLT,OIL PAN	4
970313533	5	BOLT,FLANGE	5
970310775	6	FILTER,OIL	6
970310776	7	O RING	7
970310773	8	BOLT	8

MOTEUR N4.140 STANDARD / OIL COOLER

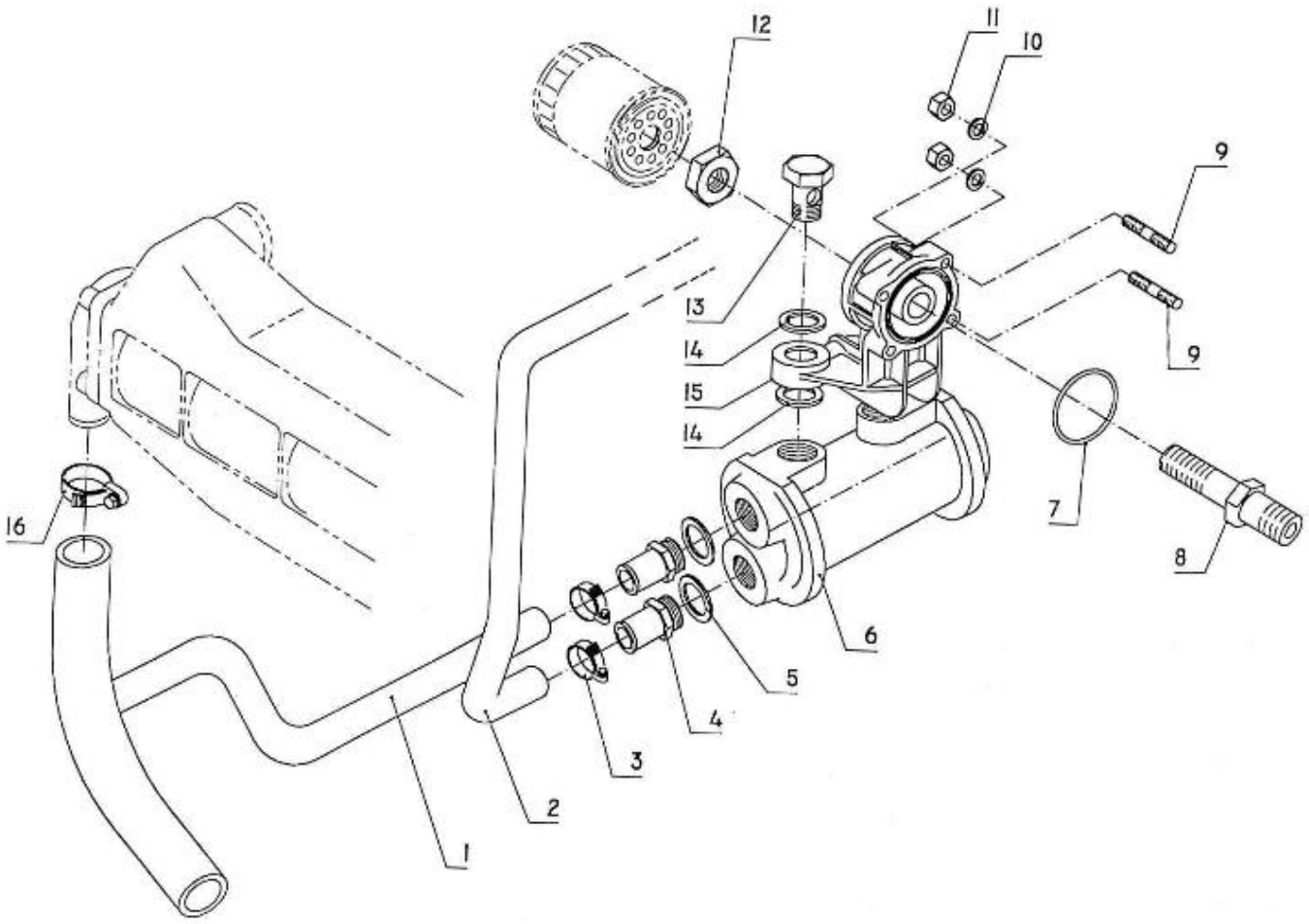

Part number	Item	Désignation article	Quantity
48328084	1	HOSE	1
48328083	2	HOSE	2
970604526	3	CLAMP,HOSE 22-32	3
970892503	4	ELBOW	4
903200409	5	GASKET	5
48300371	6	OIL COOLER	6
970301719	7	O-RING,68,00X4,00	7
970310815	8	NIPPLE,OIL FILTER	8
970307249	9	STUD	9
970119139	10	WASHER,CORRUGATED D8	10
970024015	11	NUT,M 8 A2	11
970310814	12	NUT	12
970311072	13	SCREW	13
916200023	14	GASKET	14
665700067	15	FUEL FILTER	15
970604533	16	CLAMP,HOSE 32-44	16

MOTEUR N4.140 STANDARD / CYLINDER HEAD COVER

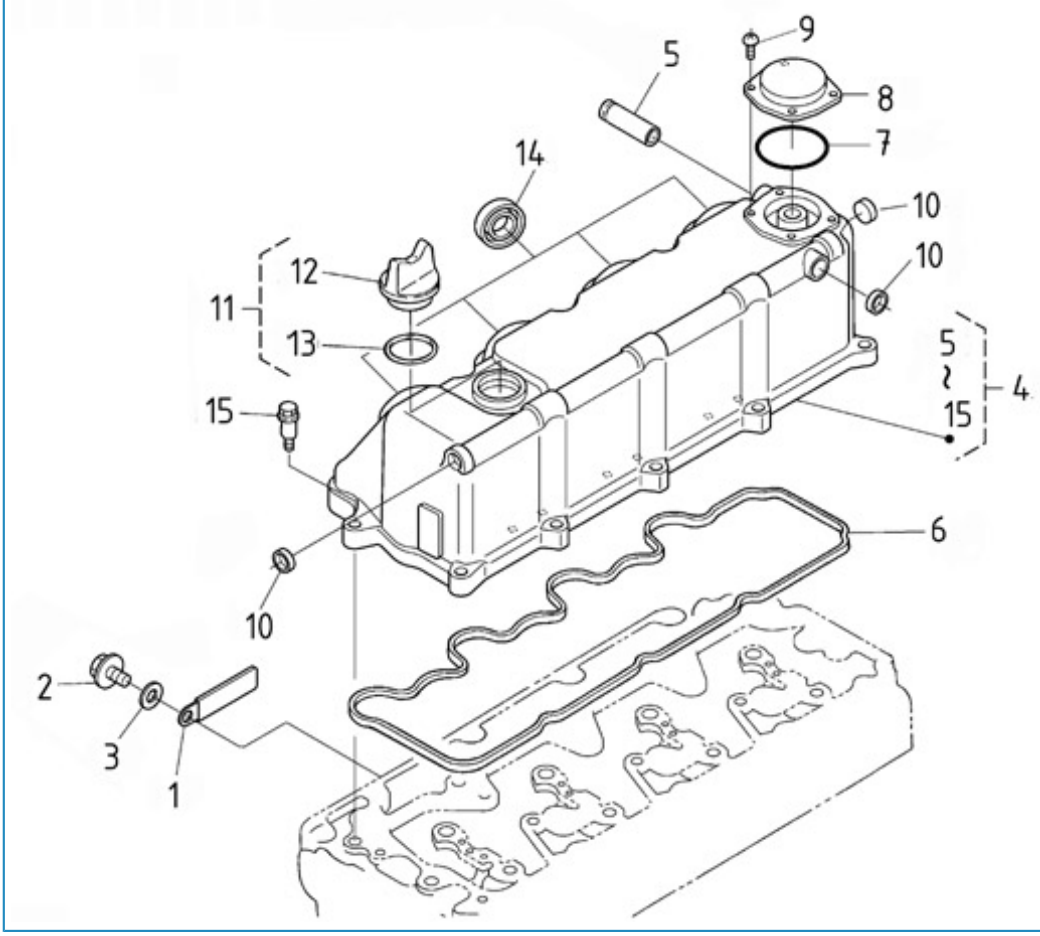

Part number	Item	Désignation article	Quantity
970313551	1	CLAMP,CORD	1
970313552	2	BOLT,FLANGE	2
970302935	3	WASHER,PLAIN D10	3
970313554	4	ASSY COVER,CYL.HEAD	4
970310806	5	UNION	5
970313555	6	GASKET,HEAD COVER	6
970313556	7	O RING,BREATHER	7
970312972	8	COVER,BREATHER	8
970310810	9	SCREW	9
970313558	10	CAP,SEALING	10
970313559	11	ASSY PLUG,O/FILLER	11
970313464	12	PLUG	12
970313560	13	O RING	13
970313561	14	SEAL,INJECTION PIPE	14
970310812	15	BOLT	15

MOTEUR N4.140 STANDARD / OIL DIPSTICK

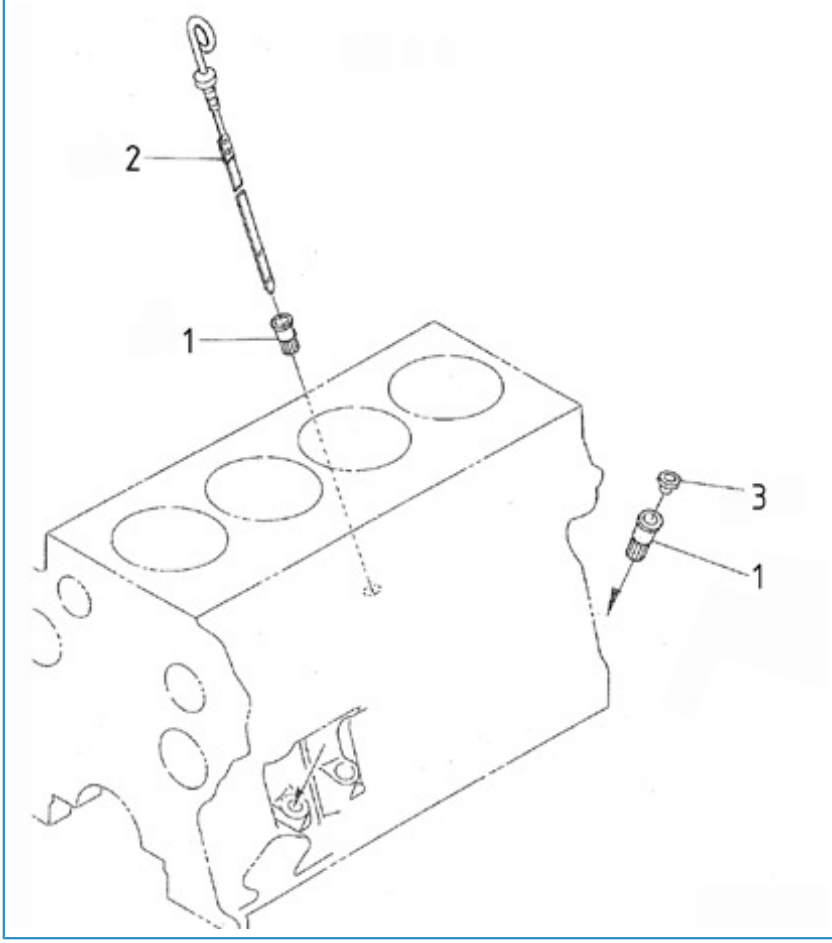

Part number	Item	Désignation article	Quantity
970310824	1	GUIDE,OIL GAUGE	1
970310825	2	DIPSTICK	2
970314755	3	PLUG	3

MOTEUR N4.140 STANDARD / TIMING GEAR CASE

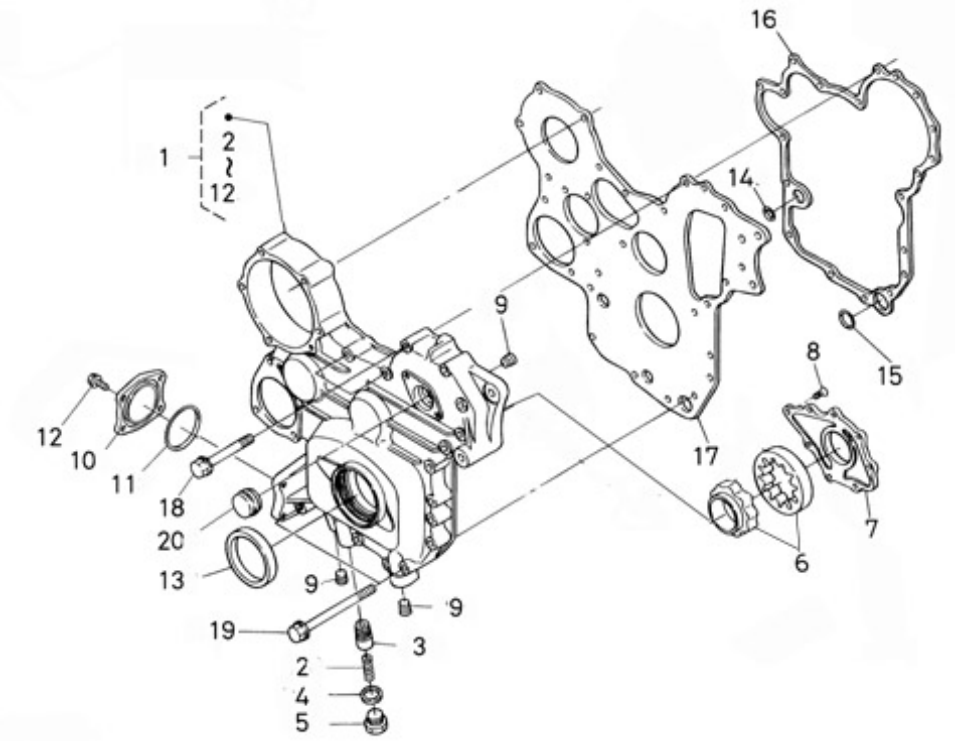

Part number	Item	Désignation article	Quantity
970310786	1	HOUSING	1
970310787	2	SPRING	2
970310788	3	ASS'Y VALVE RELIEF	3
970310374	4	GASKET,COPPER	4
970310789	5	PLUG	5
970310790	6	ASSY ROTOR,OIL PUMP	6
970310791	7	COVER,OIL PUMP	7
970313544	8	SCREW,CSK-HD	8
970310793	9	PLUG	9
970310929	10	COVER,OIL FILTER	10
970310930	11	O,RING	11
970313545	12	BOLT,FLANGE	12
970310794	13	SEAL	13
970313546	14	O RING	14
970310795	15	O RING	15
970310796	16	SEAL	16
970310797	17	PLATE,GEAR CASE	17
970313548	18	BOLT,FLANGE	18
970313549	19	BOLT,FLANGE	19
970302743	20	COVER,H/METER UNIT	20

MOTEUR N4.140 STANDARD / CYLINDER HEAD

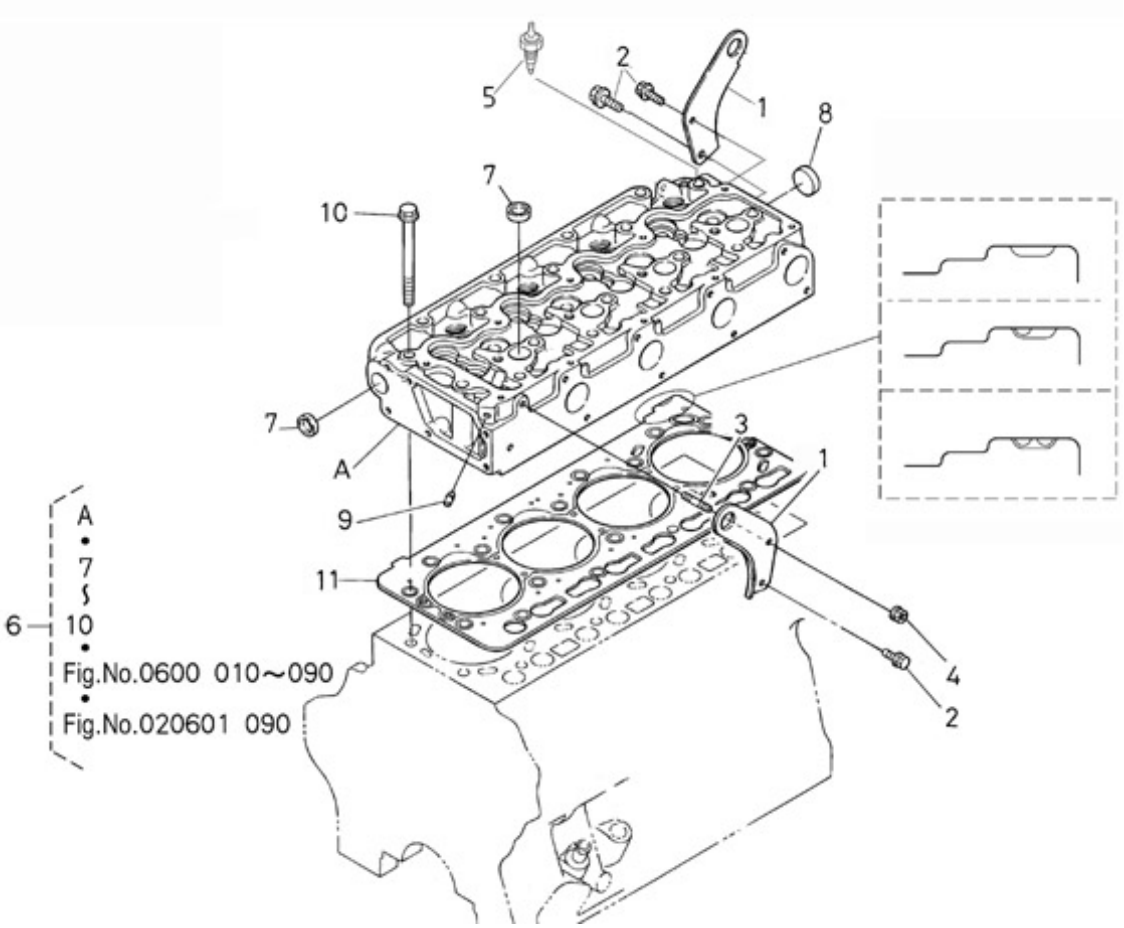

Part number	Item	Désignation article	Quantity
970310778	1	HANGER, ENGINE	1
970310773	2	BOLT	2
970312986	3	STUD	3
970310780	4	NUT,FLANGE	4
970304054	5	TEMPERATURE SWITCH 1/8 1P 97	5
970313538	6	ASSY CYLINDER HEAD	6
970301937	7	CAP,FREEZE	7
970301938	8	CAP,FREEZE	8
970490108	9	PLUG,SOCK	9
970310784	10	BOLT,CYLINDER HEAD	10
970313541	11	GASKET,CYLINDER HEAD	11
970313540	11	GASKET,CYLINDER HEAD	11
970313539	11	GASKET,CYLINDER HEAD	11

MOTEUR N4.140 STANDARD / VALVES AND SPRINGS

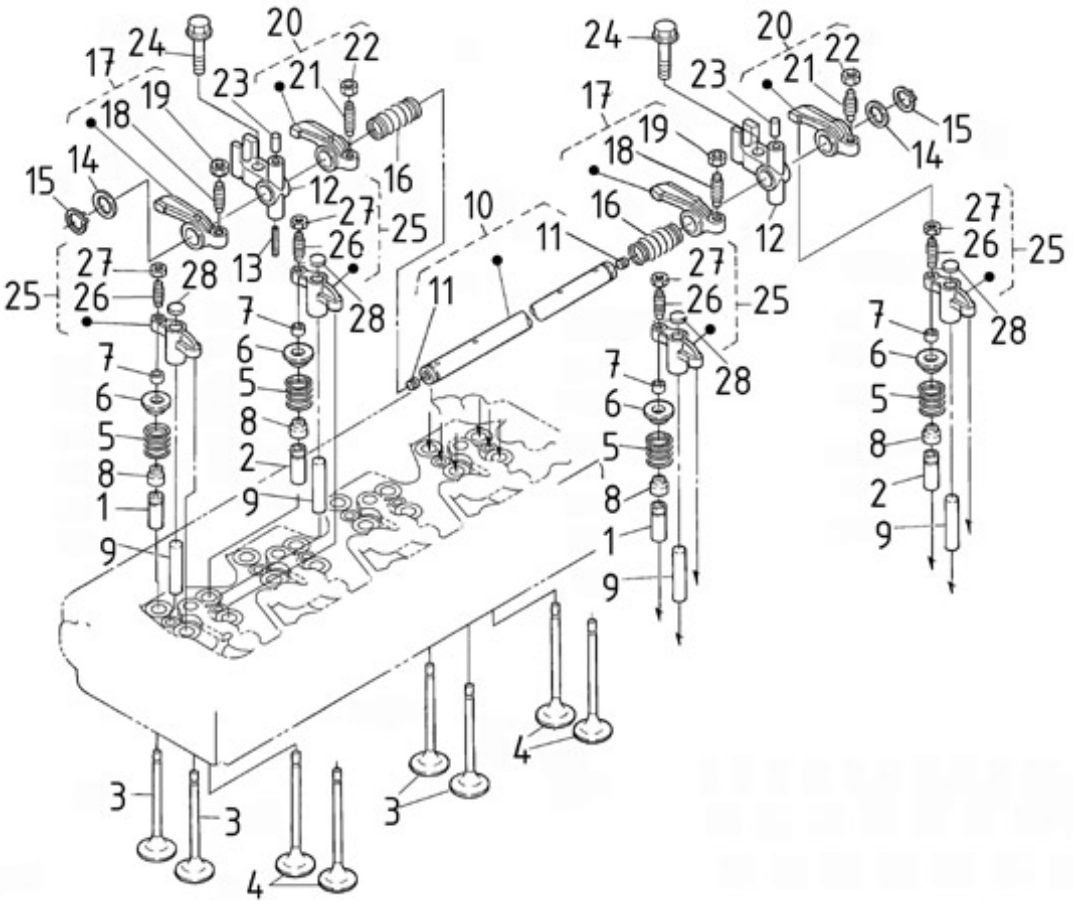

Part number	Item	Désignation article	Quantity
970302720	1	GUIDE,VALVE INTAKE 4.150	1
970302721	2	GUIDE,VALVE EXHAUST 4.150	2
970313707	3	VALVE,INLET	3
970313708	4	VALVE,EXHAUST	4
970311007	5	SPRING VALVE	5
970491004	6	RETAINER,VALVE SPRING	6
970491005	7	COLLET,VALVE SPRING	7
970311008	8	INLET VALVE SEAL	8
970313709	9	SHAFT,VALVE	9
970313710	10	ASSY SHAFT,R-ARM	10
970313711	11	SCREW,SET	11
970313712	12	BRACKET,ROCKER ARM	12
970310494	13	PIN,SPRING	13
970311014	14	WASHER	14
970313714	15	CIR CLIP,EXTERNAL	15
970313715	16	SPRING	16
970313716	17	ASSY ROCKER ARM,IN.	17
970302019	18	SCREW,ADJUSTING	18
970302021	19	NUT	19
970313717	20	ASSY ROCKER ARM,EXH.	20
970302019	21	SCREW,ADJUSTING	21
970302021	22	NUT	22
970313718	23	PIN,STRAIGHT	23
970313719	24	BOLT,FLANGE	24
970311022	25	ASSY ARM	25
970311023	26	SCREW	26
970302795	27	NUT	27
970311024	28	PAD	28

MOTEUR N4.140 STANDARD / CAMSHAFT

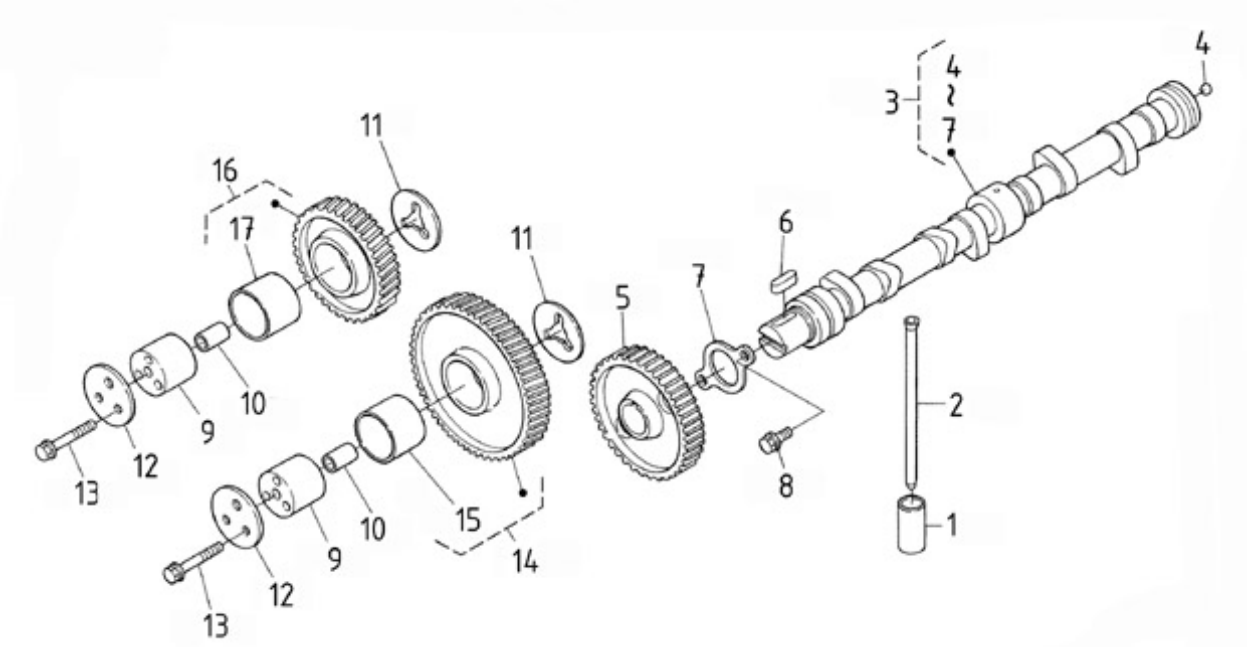

Part number	Item	Désignation article	Quantity
970307317	1	TAPPET	1
970310830	2	PUSH ROD	2
970310831	3	CAMSHAFT CPL	3
970313570	4	BALL	4
970310833	5	GEAR,CAM	5
970492126	6	KEY,FEATHER	6
970310834	7	STOPPER	7
970310773	8	BOLT	8
970310836	9	SHAFT	9
970313572	10	PIN,GEAR IDLE	10
970310837	11	COLLAR	11
970310838	12	COLLAR	12
970313548	13	BOLT,FLANGE	13
970310839	14	COMP.GEAR,IDLE	14
970313573	15	BUSH,IDLE GEAR	15
970310840	16	COMP.GEAR,IDLE	16
970313573	17	BUSH,IDLE GEAR	17

MOTEUR N4.140 STANDARD / CAMSHAFT- BALANCING SHAFT

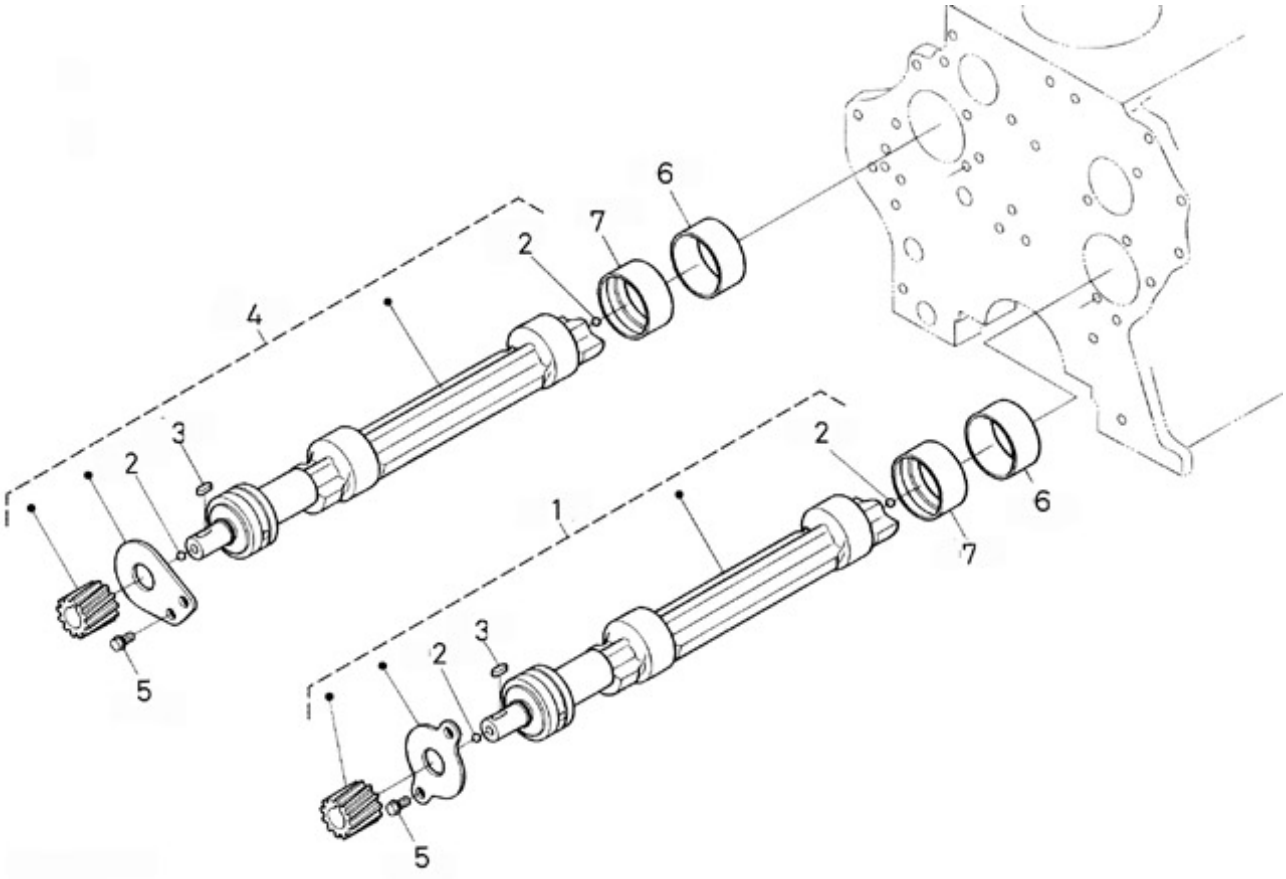

Part number	Item	Désignation article	Quantity
970313593	1	ASSY SHAFT,BALANCER	1
970302897	2	BEARING,BALL	2
970313595	3	KEY,FEATHER	3
970313596	4	ASSY SHAFT,BALANCER	4
970310773	5	BOLT	5
970311117	6	METAL	6
970311119	7	METAL	7

MOTEUR N4.140 STANDARD / ACCELERATOR

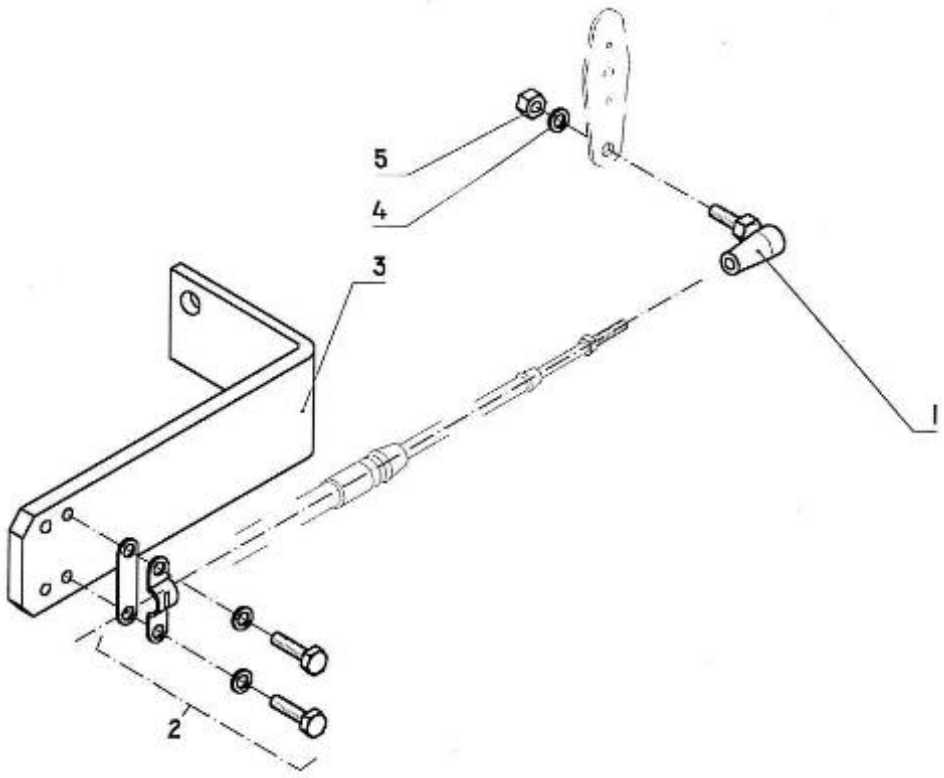

Part number	Item	Désignation article	Quantity
970830124	1	JOINT	1
970835020	2	CLAMP	2
95203061	3	BRACKET	3
970635459	4	WASHER,PLAIN D 6	4
970635460	5	NUT,M 6	5

MOTEUR N4.140 STANDARD / CRANKSHAFT-PISTONS

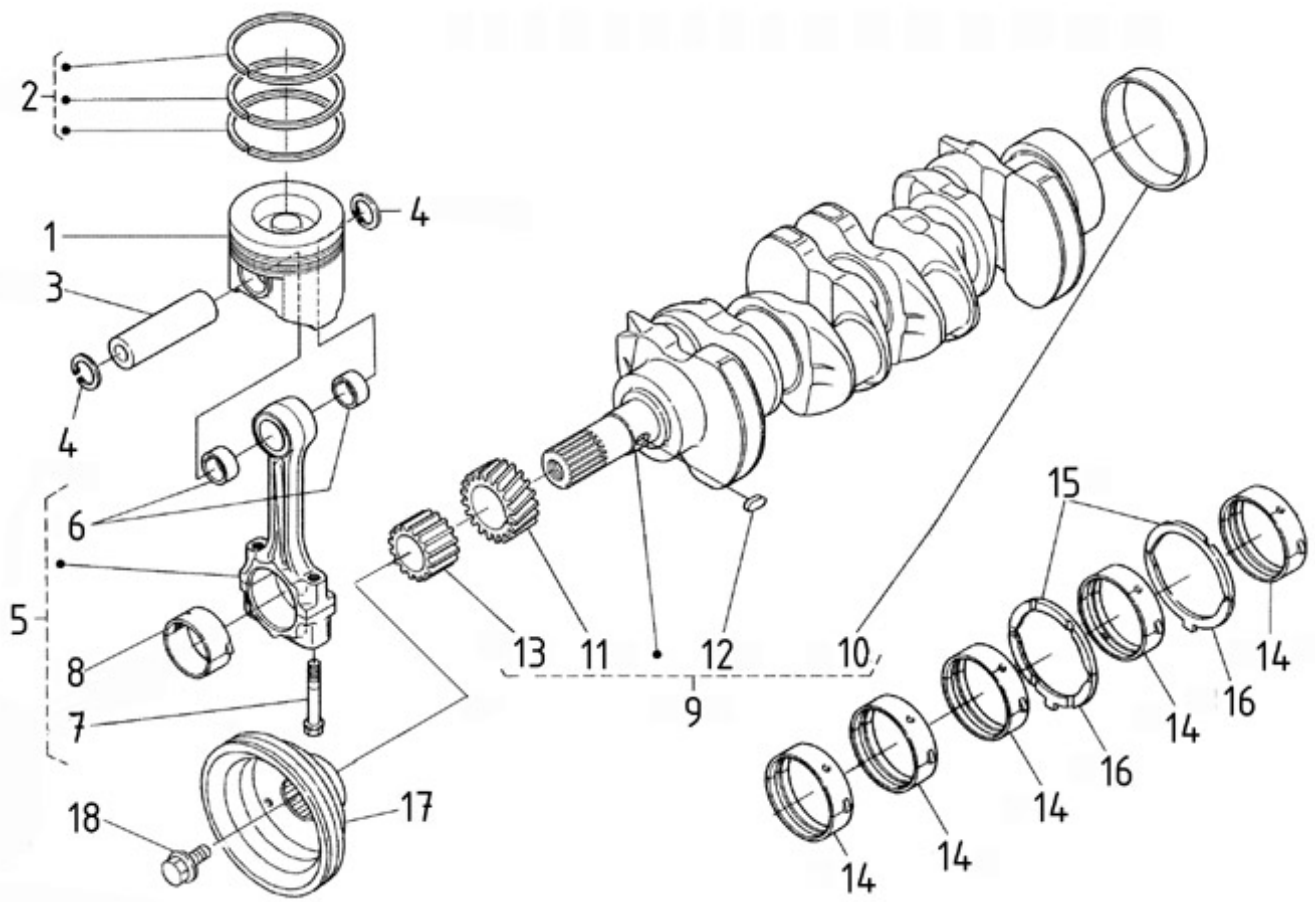

Part number	Item	Désignation article	Quantity
970313576	1	PISTON	1
970313575	1	PISTON	1
970313578	2	ASSY PISTON RING	2
970313577	2	ASSY PISTON RING	2
970310846	3	METAL, CONN.ROD	3
970310847	4	CIRCLIP	4
970313580	5	ASSY ROD,CONNECTING	5
970316330	6	BUSH,PISTON PIN	6
970310850	7	BOLT	7
970313582	8	METAL,CRANKPIN	8
970310855	8	METAL,CRANK PIN 02	8
970313583	9	COMP.CRANKSHAFT	9
970310860	10	SLEEVE	10
970313584	11	GEAR,CRANKSHAFT	11
970491106	12	KEY,FEATHER	12
970310862	13	GEAR,OIL PUMP DRIVE	13
970316335	14	METAL,CRANKSHAFT STD/SET	14
970313587	14	METAL,CRANKSHAFT	14
970316336	14	METAL,CRANKSHAFT -0.20mm/SET	14
970310867	15	METAL,SIDE 02	15
970310866	15	METAL,SIDE	15
970310868	15	METAL,SIDE 04	15
970310869	16	METAL,SIDE	16
970310870	16	METAL,SIDE 02	16
970313588	17	PULLEY,FAN DRIVE	17
970313589	18	BOLT	18

MOTEUR N4.140 STANDARD / CRANKSHAFT-BEARINGS

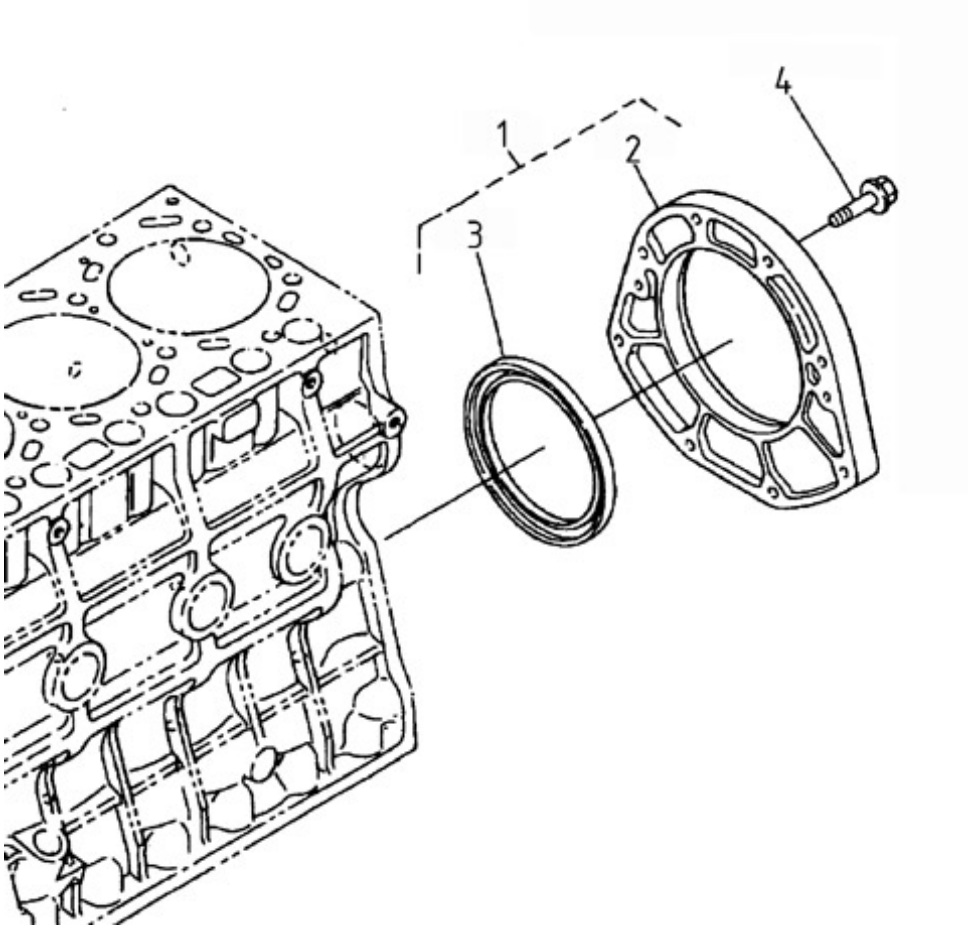

Part number	Item	Désignation article	Quantity
970310826	1	COVER	1
970310827	3	GASKET	3
970313569	4	BOLT,FLANGE	4

MOTEUR N4.140 STANDARD / FLYWHEEL

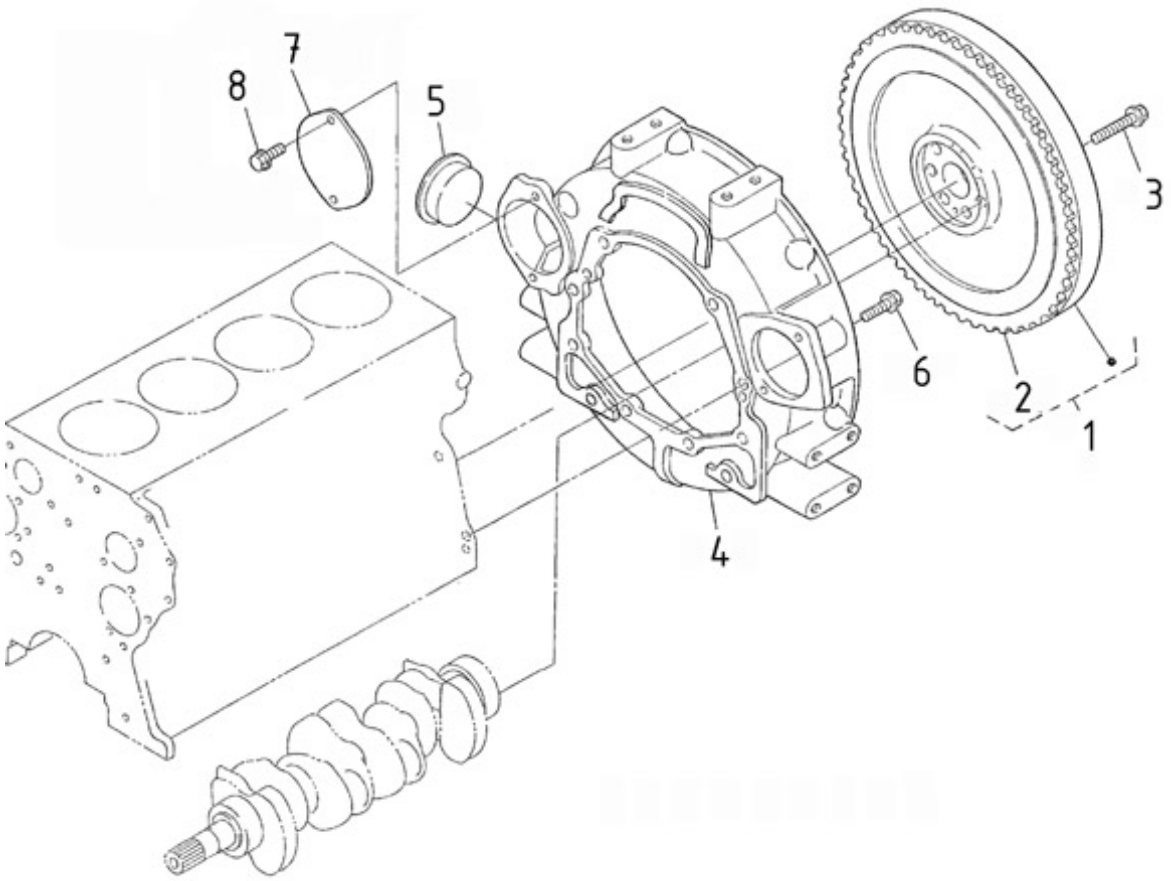

Part number	Item	Désignation article	Quantity
970310876	1	COMP.FLYWHEEL	1
970310877	2	GEAR,RING	2
970310878	3	BOLT,FLYWHEEL	3
970313590	4	HOUSING,FLYWHEEL	4
970310880	5	COVER	5
970313591	6	BOLT,FLANGE	6
970310882	7	COVER	7
970313592	8	BOLT,FLANGE	8

MOTEUR N4.140 STANDARD / CAMSHAFT INJECTION PUMP

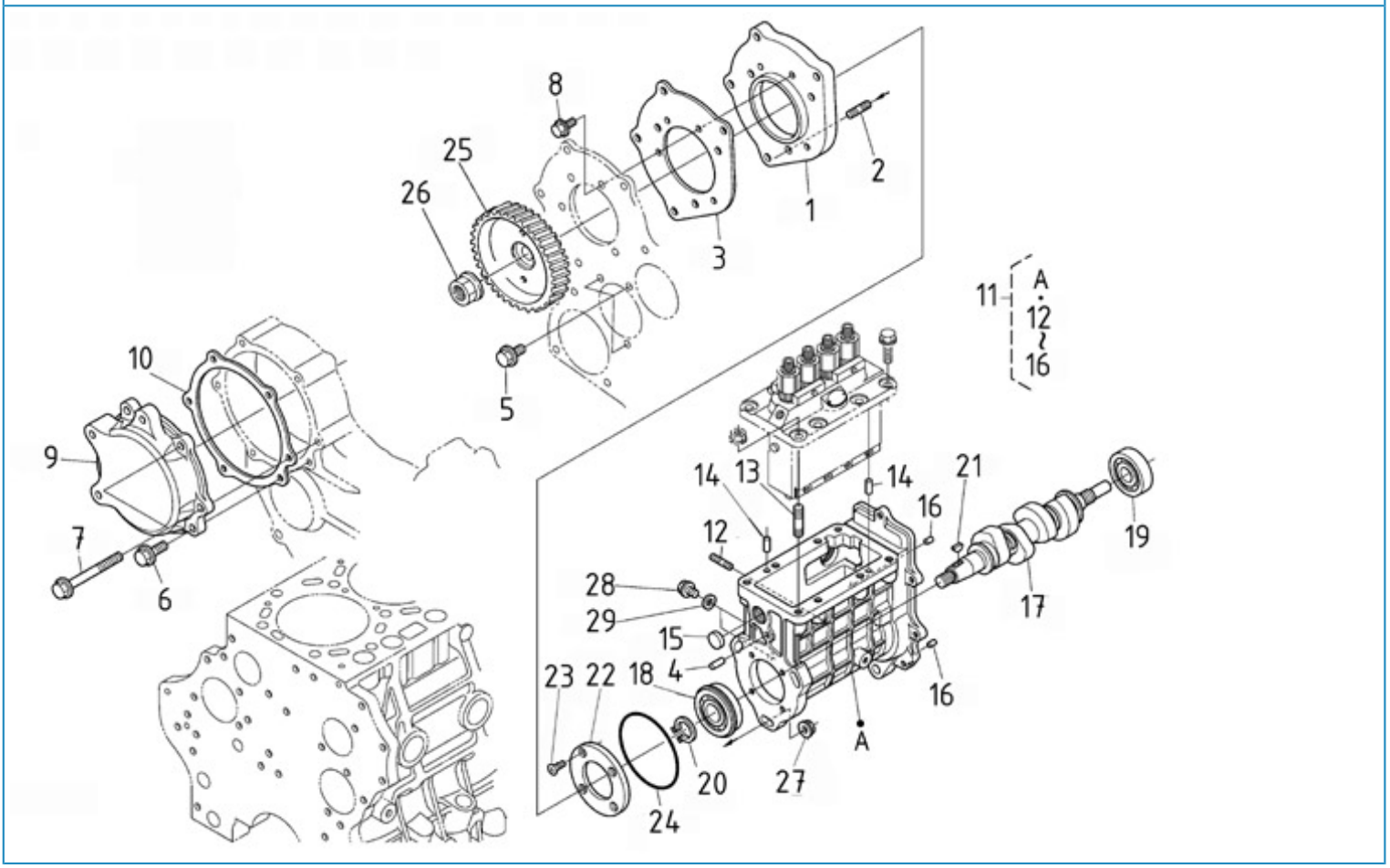

Part number	Item	Désignation article	Quantity
970313631	1	BASE,INJECTION PUMP	1
970313632	2	STUD	2
970310923	3	GASKET	3
970313633	4	PIN,STRAIGHT	4
970310773	5	BOLT	5
970313599	6	BOLT,FLANGE	6
970313549	7	BOLT,FLANGE	7
970310926	8	BOLT,FLANGE	8
970310927	9	COVER INJECTION PUMP	9
970316341	10	GASKET,I/P COVER	10
970313635	11	ASSY HOUSING,I/P	11
970313398	12	STUD	12
970313636	13	STUD	13
970490122	14	PIN,CYLINDRICAL	14
970310934	15	PLUG	15
970313638	16	PIN,STRAIGHT	16
970313639	17	CAMSHAFT,FUEL	17
970313640	18	BEARING,BALL	18
970313641	19	BEARING,BALL	19
970492135	20	CIR-CLIP,EXTERNAL	20
970313643	21	KEY,WOODRUFF	21
970313644	22	STOPPER,FUEL C/SHAFT	22
970313544	23	SCREW,CSK-HD	23
970310943	24	GASKET	24
970310944	25	GEAR,INJ.PUMP	25
970313645	26	NUT,UBS	26
970310780	27	NUT,FLANGE	27
970310773	28	BOLT	28
970491131	29	WASHER,SEAL	29

MOTEUR N4.140 STANDARD / INJECTION AND FEED PUMP

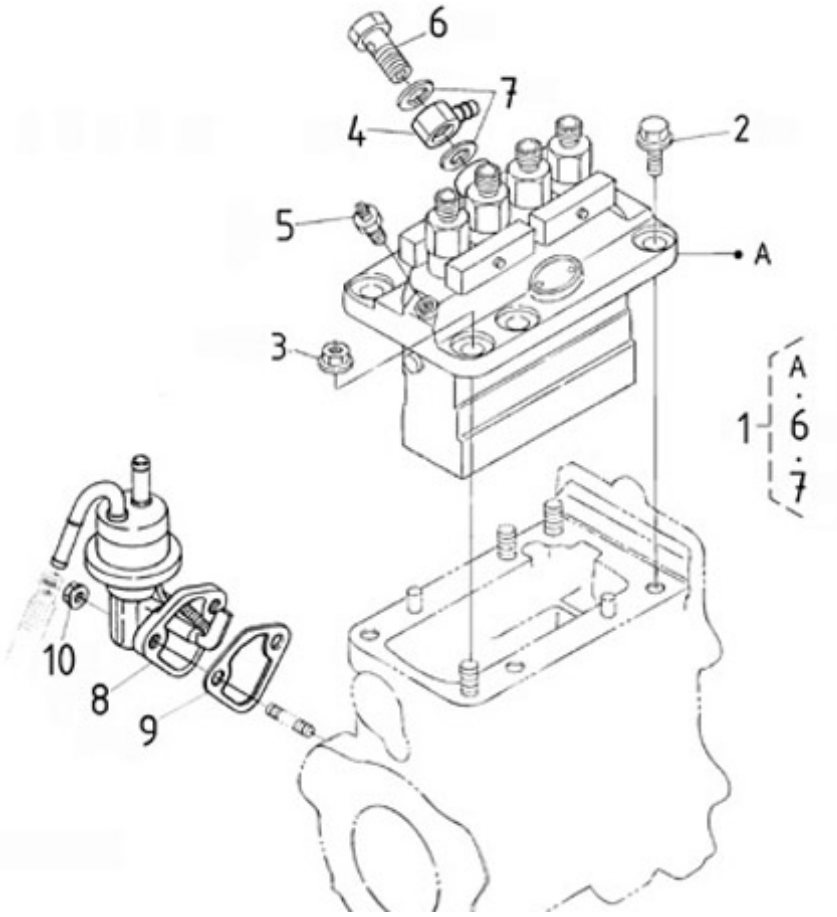

Part number	Item	Désignation article	Quantity
970313598	1	ASSY PUMP,INJECTION	1
970313599	2	BOLT,FLANGE	2
970310780	3	NUT,FLANGE	3
970310456	4	JOINT,EYE	4
970313600	5	SCREW,AIR BREEDER	5
970313601	6	SCREW,HOLLOW	6
970307379	7	WASHER,NIPPLE	7
970142512	9	GASKET,FUEL PUMP 2. 40	9
970313602	10	NUT,FLANGE	10

MOTEUR N4.140 STANDARD / INJECTION NOZZLES AND PIPES

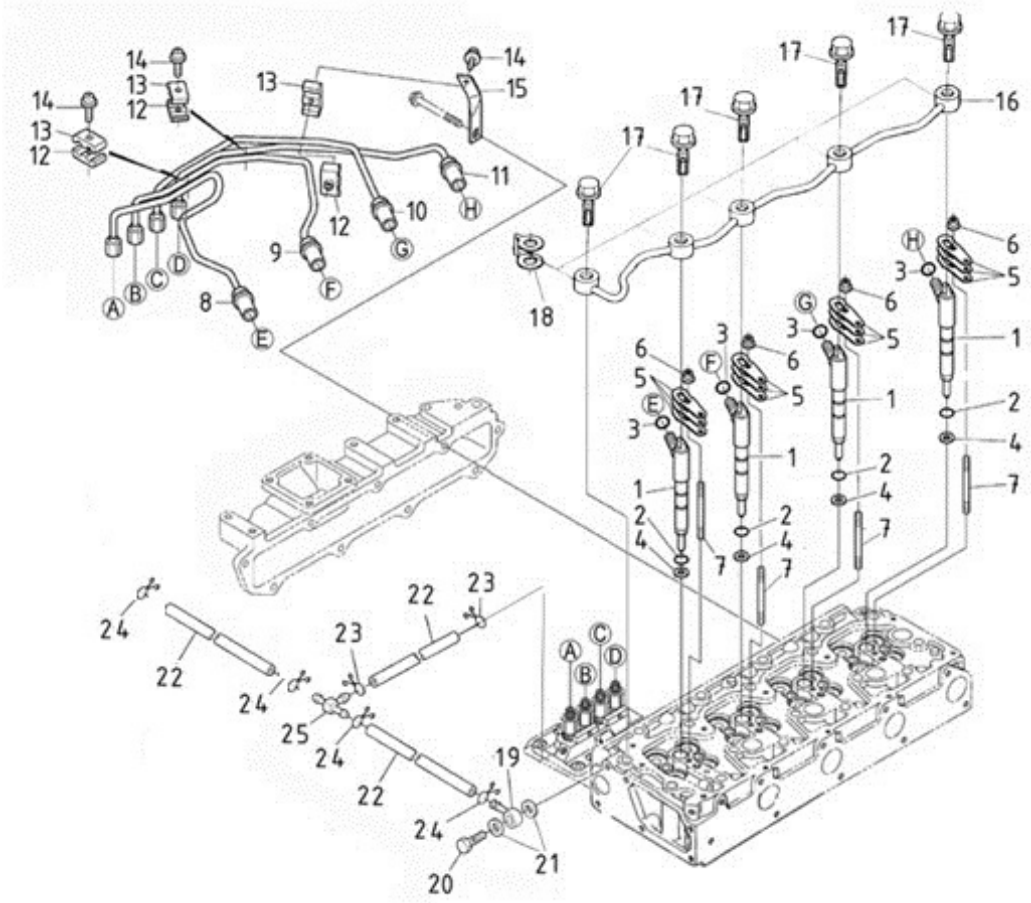

Part number	Item	Désignation article	Quantity
970313261	1	INJECTOR	1
970313263	2	O RING	2
970313616	3	O RING	3
970313262	4	GASKET	4
970313617	5	CLAMP,INJ.NOZZLE	5
970310780	6	NUT,FLANGE	6
970313618	7	STUD	7
970313619	8	PIPE,INJECTION	8
970313620	9	PIPE,INJECTION	9
970313621	10	PIPE,INJECTION	10
970313622	11	PIPE,INJECTION	11
970142114	12	CLAMP,FUEL LINES 1+2	12
970142115	13	CLAMP,FUEL-LINES 1+2	13
970492118	14	SCREW,M 5X 20 ROUND HEAD	14
970313624	15	STAY,INJECTION PIPE	15
970313625	16	ASSY PIPE,OVER FLOW	16
970313626	17	BOLT,EYE JOINT	17
970313627	18	GASKET	18
970313324	19	UNION	19
970310504	20	BOLT,EYE JOINT	20
970491131	21	WASHER,SEAL	21
48878016	22	HOSE	22
970439306	23	CLAMP	23
970310171	24	CLAMP	24

MOTEUR N4.140 STANDARD / FUEL FILTER

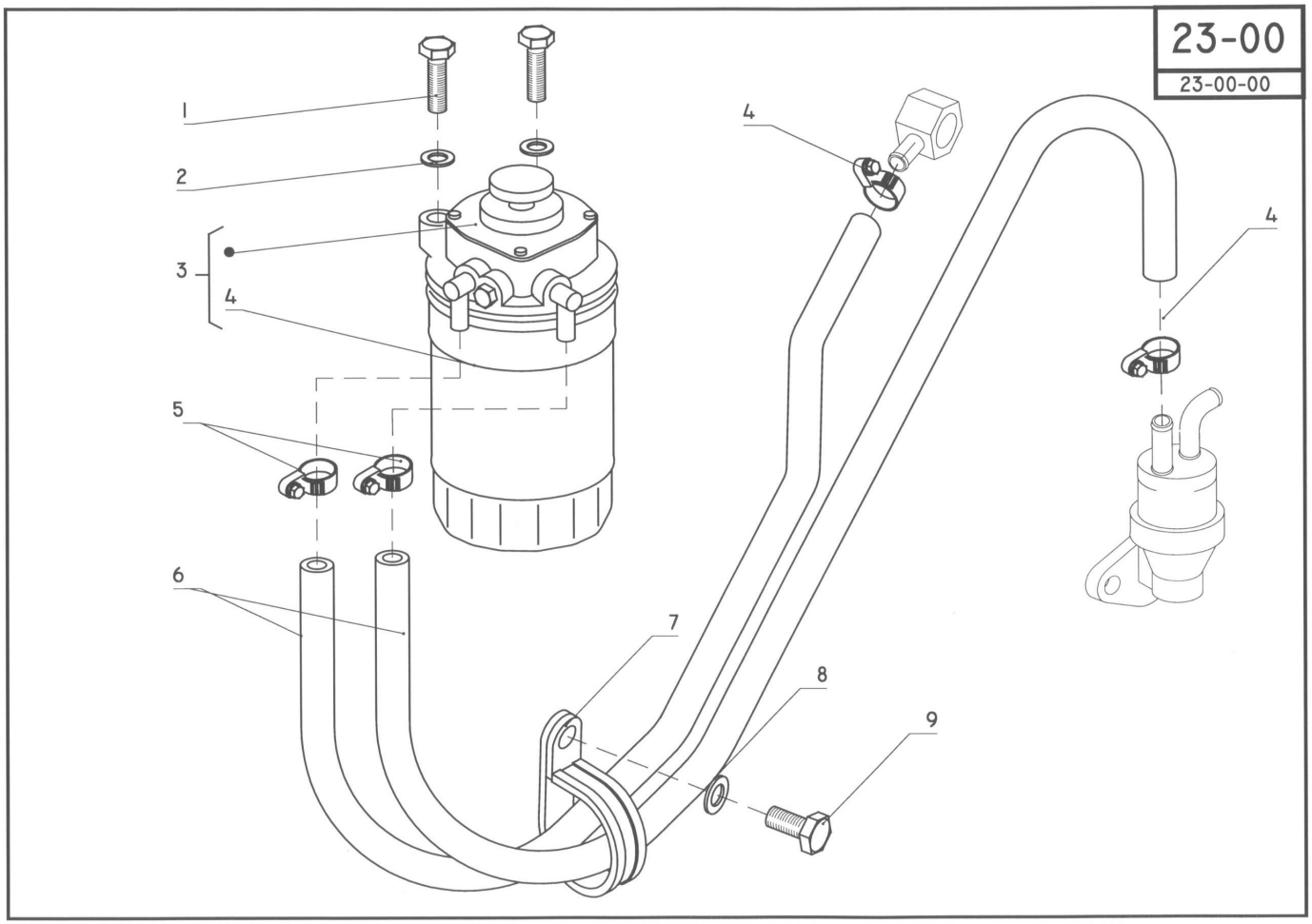

Part number	Item	Désignation article	Quantity
970499041	1	BOLT	1
970119137	2	WASHER,CORRUGATED D10	2
970310745	3	FILTER	3
970310746	4	FILTER	4
970439306	5	CLAMP	5
48878016	6	HOSE	6
970304072	7	CLAMP	7
970119139	8	WASHER,CORRUGATED D8	8
970119141	9	BOLT,HEX M8X 20	9

MOTEUR N4.140 STANDARD / AIR FILTER

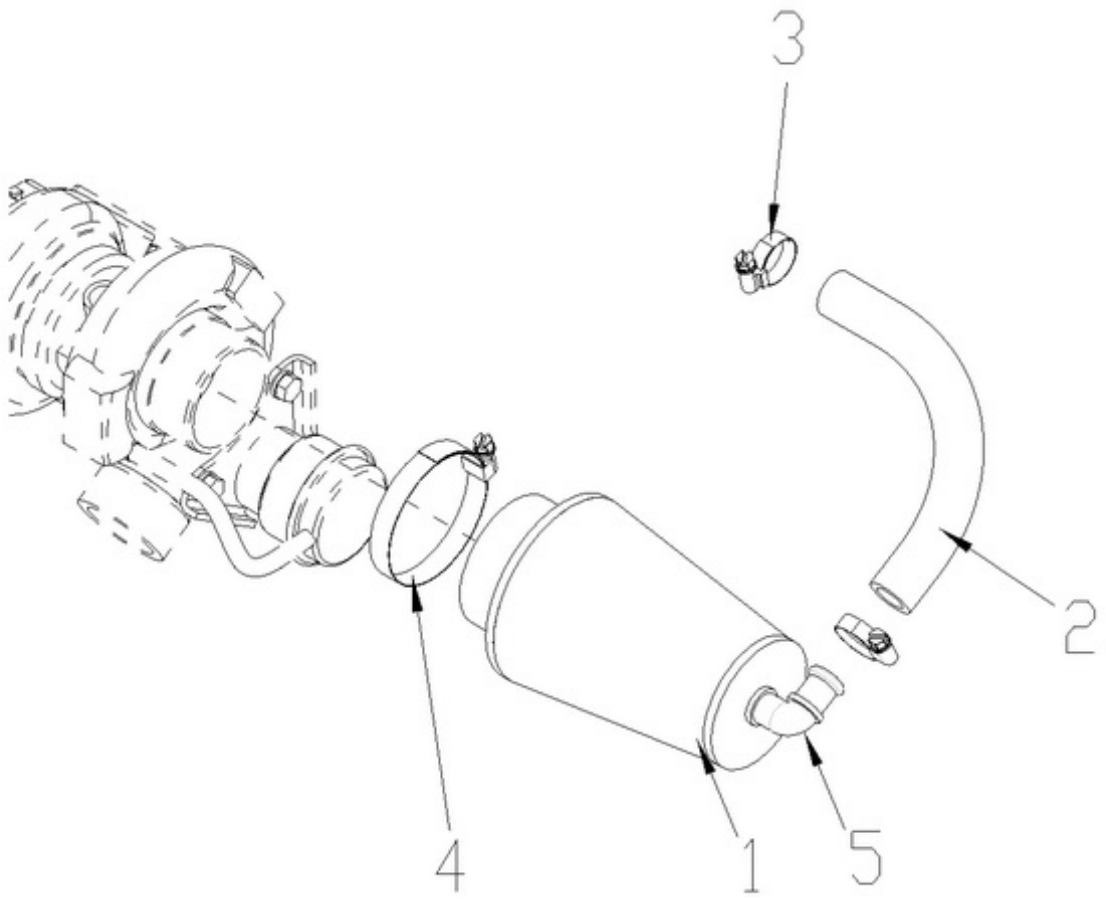

Part number	Item	Désignation article	Quantity
48101039A	1	FILTRE A AIR N4.115	1
48328071	2	HOSE	2
970434506	3	CLAMP,HOSE 13-20	3
970300071	4	CLAMP,HOSE 50-65	4
48509001	5	COUDE 90	5

MOTEUR N4.140 STANDARD / OIL FILTER

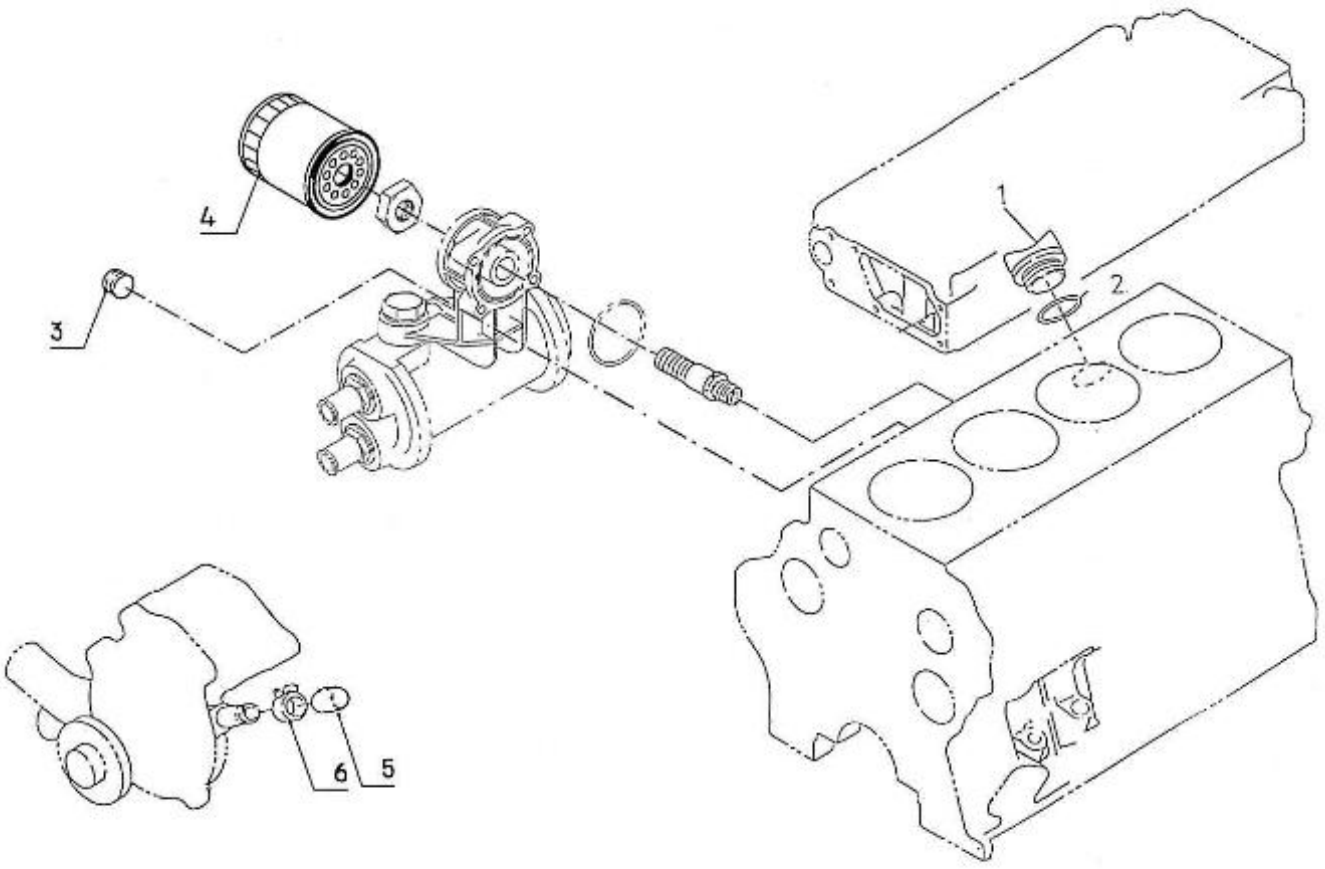

Part number	Item	Désignation article	Quantity
970490510	1	CAP,FILLING OIL	1
970313560	2	O RING	2
970603003	3	FILTER,ELEMENT OIL 4.180/90	3
970310264	4	PLUG	4
970311164	5	PLUG	5
970301604	6	CLAMP,HOSE 15-24	6

MOTEUR N4.140 STANDARD / REGULATOR ADJUSTMENT

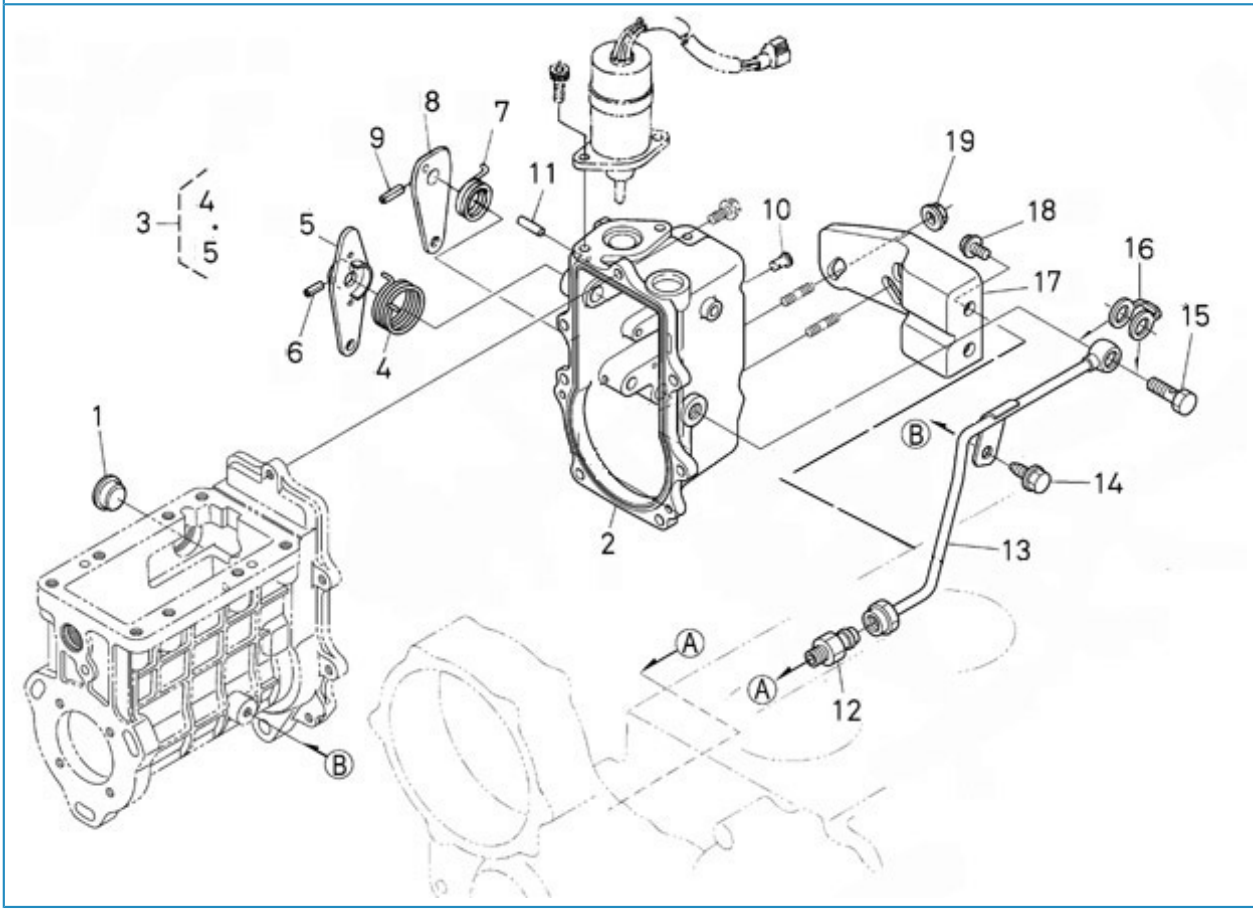

Part number	Item	Désignation article	Quantity
970310892	1	COVER	1
970313603	2	HOUSING,GOVERNOR	2
970313604	3	KIT,LEVER	3
970313605	4	SPRING	4
970313606	5	LEVER,SPEED CONTROL	5
970310902	6	PIN,SPRING	6
970307361	7	SPRING,RETURN	7
970310904	8	LEVER	8
970310902	9	PIN,SPRING	9
970490204	10	PIN,TIMING COVER	10
970313609	11	PIN,STRAIGHT	11
970313610	12	JOINT,UNION	12
970313611	13	ASSY PIPE,I.P OIL	13
970310942	14	VIS	14
970313612	15	BOLT,EYE JOINT	15
970313613	16	GASKET	16
970313614	17	BRACKET,INJ.PUMP	17
970310773	18	BOLT	18
970310780	19	NUT,FLANGE	19

MOTEUR N4.140 STANDARD / SPEED REGULATOR

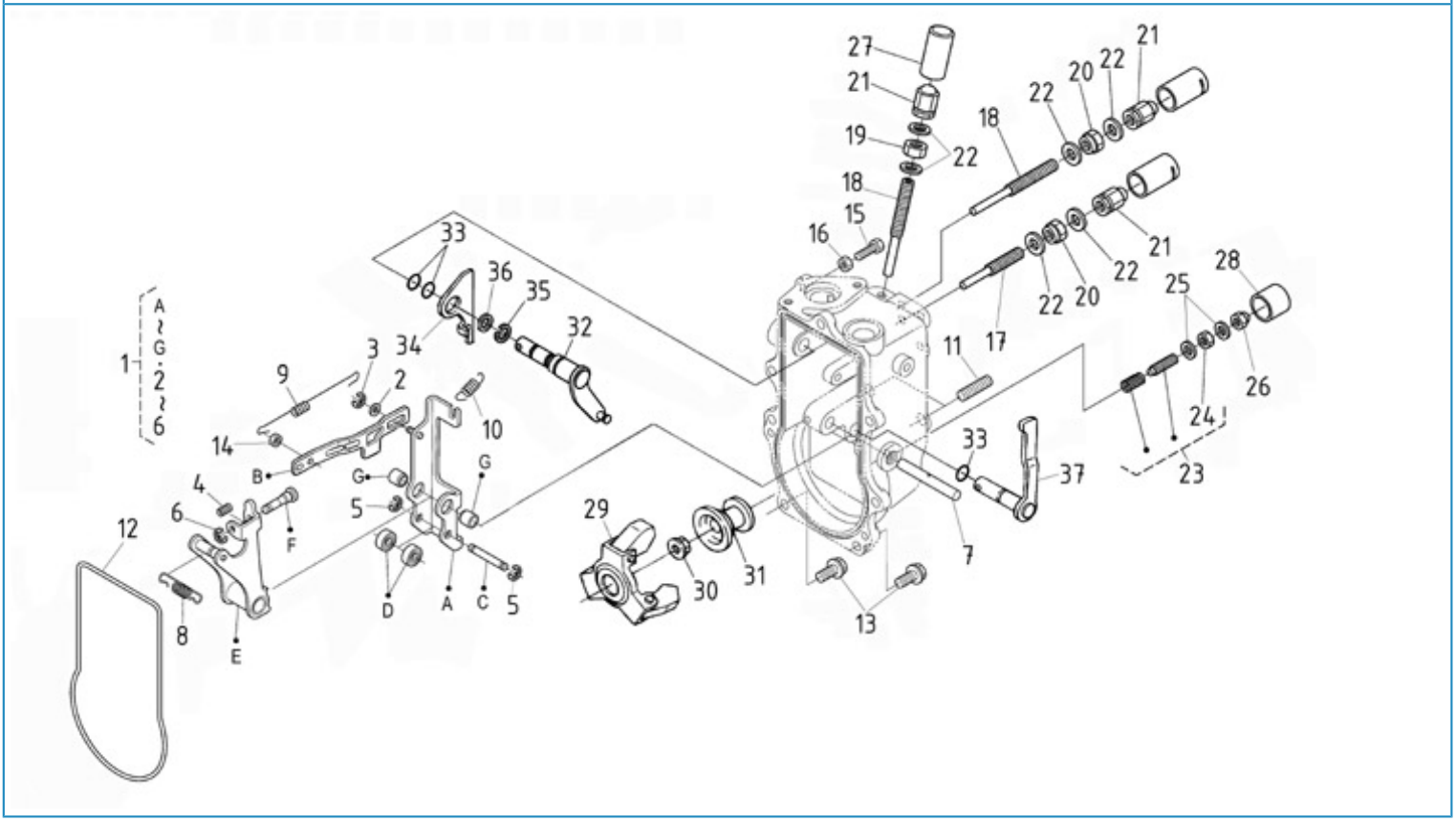

Part number	Item	Désignation article	Quantity
970313646	1	ASSY LEVER,FORK	1
970313647	2	WASHER,PLAIN	2
970313648	3	CIR CLIP,EXTERNAL	3
970313649	4	SPRING	4
970313650	5	CIR CLIP,EXTERNAL	5
970313651	6	CIR CLIP,EXTERNAL	6
970313652	7	SHAFT,FORK LEVER	7
970313653	8	SPRING,GOVERNOR	8
970313654	9	SPRING,START	9
970310954	10	SPRING	10
970313655	11	STUD	11
970310956	12	GASKET	12
970313656	13	BOLT,FLANGE	13
970313657	14	NUT,LOCK	14
970141301	15	BOLT, STOPPER ADJ.	15
970151133	16	NUT,M 6	16
970313659	17	BOLT,ADJUSTING	17
970310960	18	BOLT	18
970310359	19	NUT	19
970310962	20	NUT	20
970302839	21	NUT,CAP	21
970150403	22	RING,SEAL	22
970313660	23	ASSY BOLT,ADJUSTMENT	23
970491129	24	NUT	24
970491131	25	WASHER,SEAL	25
970141130	26	NUT, IDLE ASSEM.	26
970310464	27	CAP	27
970141132	28	CAP, BOLT COVER	28
970313661	29	ASSY WEIGHT,GOVERNOR	29
39460919	30	NUT, FLANGE	30
970313663	31	SLEEVE,GOVERNOR	31
970313664	32	ASSY LEVER(GOVERNOR)	32
970313665	33	O RING	33
970313666	34	LEVER,STOP	34
970313667	35	CIR CLIP,EXTERNAL	35
970302015	36	WASHER	36
970310903	37	ASSY LEVER	37

MOTEUR N4.140 STANDARD / TURBOCHARGER

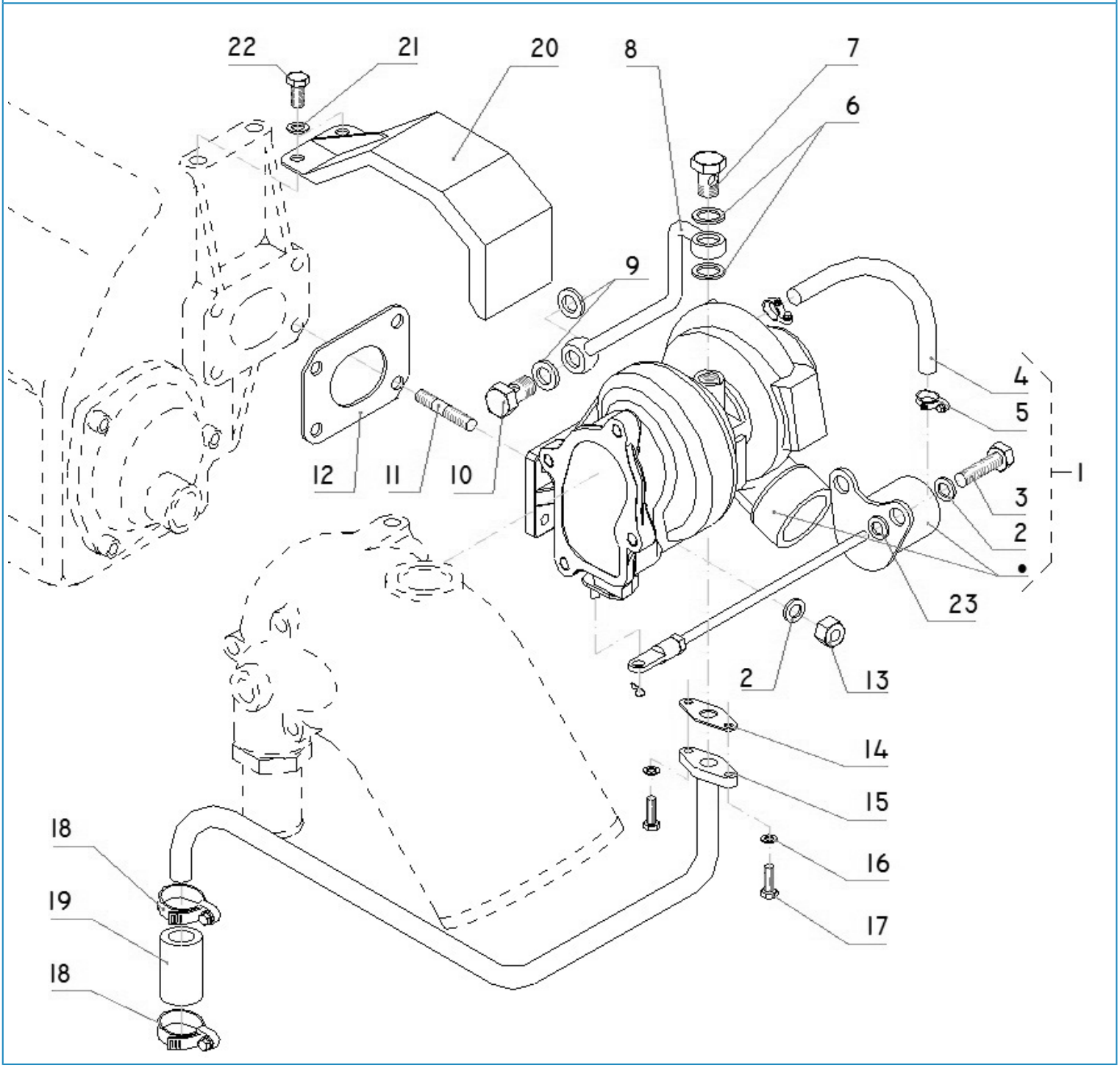

Part number	Item	Désignation article	Quantity
970314758	1	TURBO CHARGER N4.115	1
970119138	2	WASHER,SPRING D 8	2
970315945	3	ASSY HOSE, WASTE GATE N4.115	3
970315946	4	CLAMP	4
970300430	6	GASKET,RING D10	6
970310505	7	BOLT,EYE JOINT	7
51306101	8	PIPE	8
970300288	9	GASKET,M8	9
970310504	10	BOLT,EYE JOINT	10
970300080	11	STUD,M 8X 25	11
970310725	12	GASKET	12
970027322	13	NUT,M 8	13
970310508	14	GASKET NA	14
51306100	15	PIPE	15
970119149	16	WASHER, SPRING D 6	16
970644006	17	BOLT,HEX M 6X 20	17
970301604	18	CLAMP,HOSE 15-24	18
970310509	19	PIPE,OIL	19
95310412	20	TURBO COVER	20
970119139	21	WASHER,CORRUGATED D8	21
970119141	22	BOLT,HEX M8X 20	22

MOTEUR N4.140 STANDARD / FRESH WATER PUMP

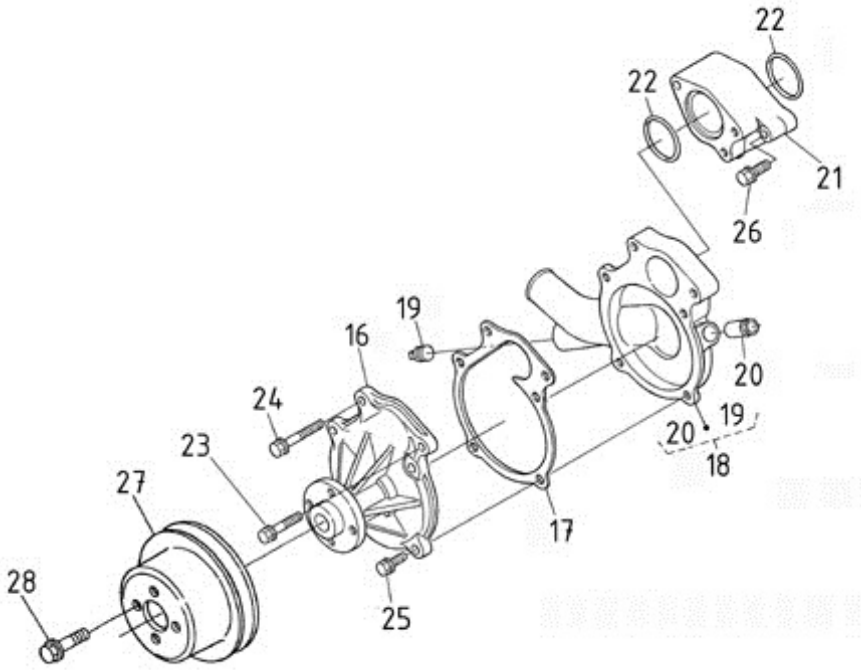

Part number	Item	Désignation article	Quantity
970310993	16	PUMP,F/WATER	16
970310994	17	GASKET	17
970313117	18	ASSY SUPPORT W/P	18
970313701	19	PLUG	19
970310806	20	UNION	20
970310998	21	SUPPORT 2,W/PUMP	21
970310999	22	O RING	22
970311000	23	BOLT	23
970313569	25	BOLT,FLANGE	25
970313705	26	BOLT,FLANGE	26
970313706	27	PULLEY,FAN	27
970310773	28	BOLT	28

MOTEUR N4.140 STANDARD / HEAT EXCHANGER - DETAILS

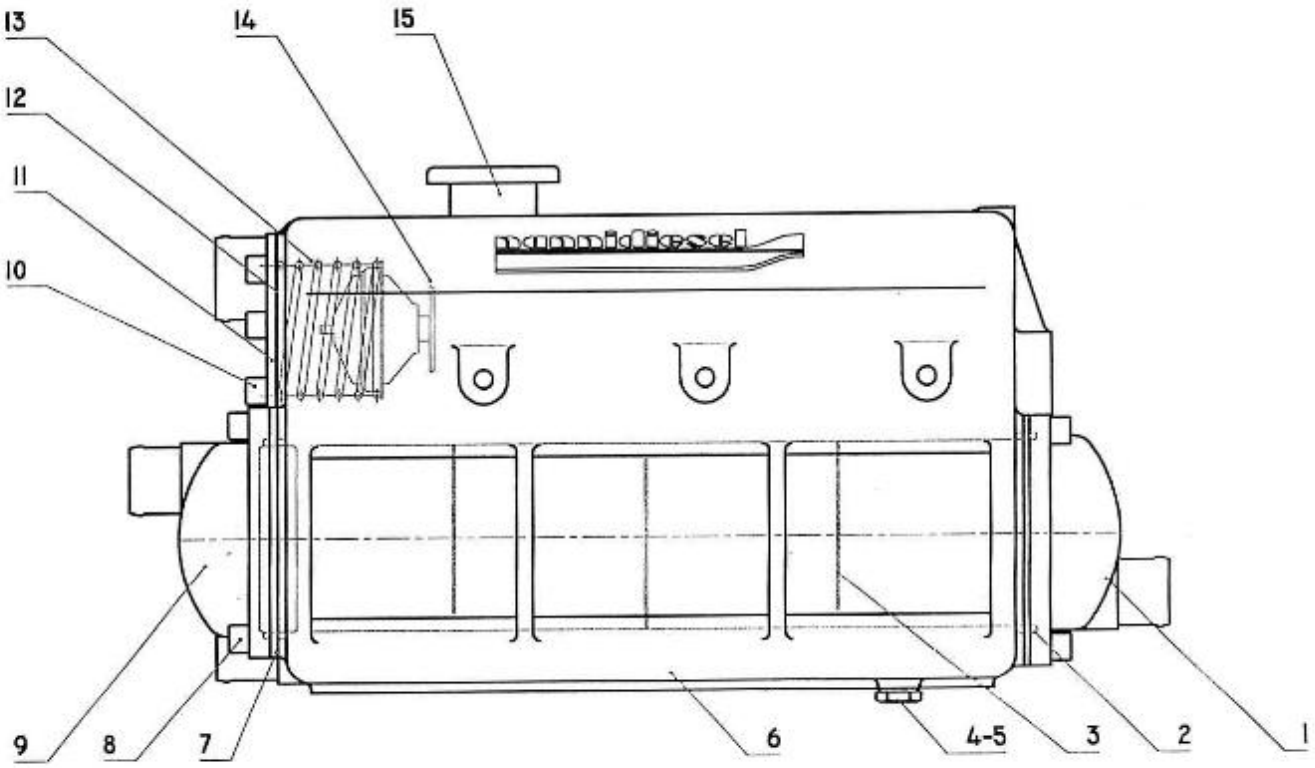

Part number	Item	Désignation article	Quantity
970311041	1	COVER	1
970311042	2	O-RING	2
970311043	3	TUBE STACK	3
970300306	4	GASKET,RING D14	4
970875506	5	PLUG	5
970311044	6	HEAT EXCHANGER BODY	6
970311050	7	SPACER	7
970310755	8	BOLT	8
970311049	9	COVER	9
970498003	10	BOLT,SOCK M 8X 25	10
970311048	11	SPRING	11
970311047	12	GASKET	12
970311045	13	SPRING	13
970311046	14	THERMOSTAT	14
970604614	15	CAP,FILLING 0, 7 DOUBLE SEAL	15

MOTEUR N4.140 STANDARD / HEAT EXCHANGER

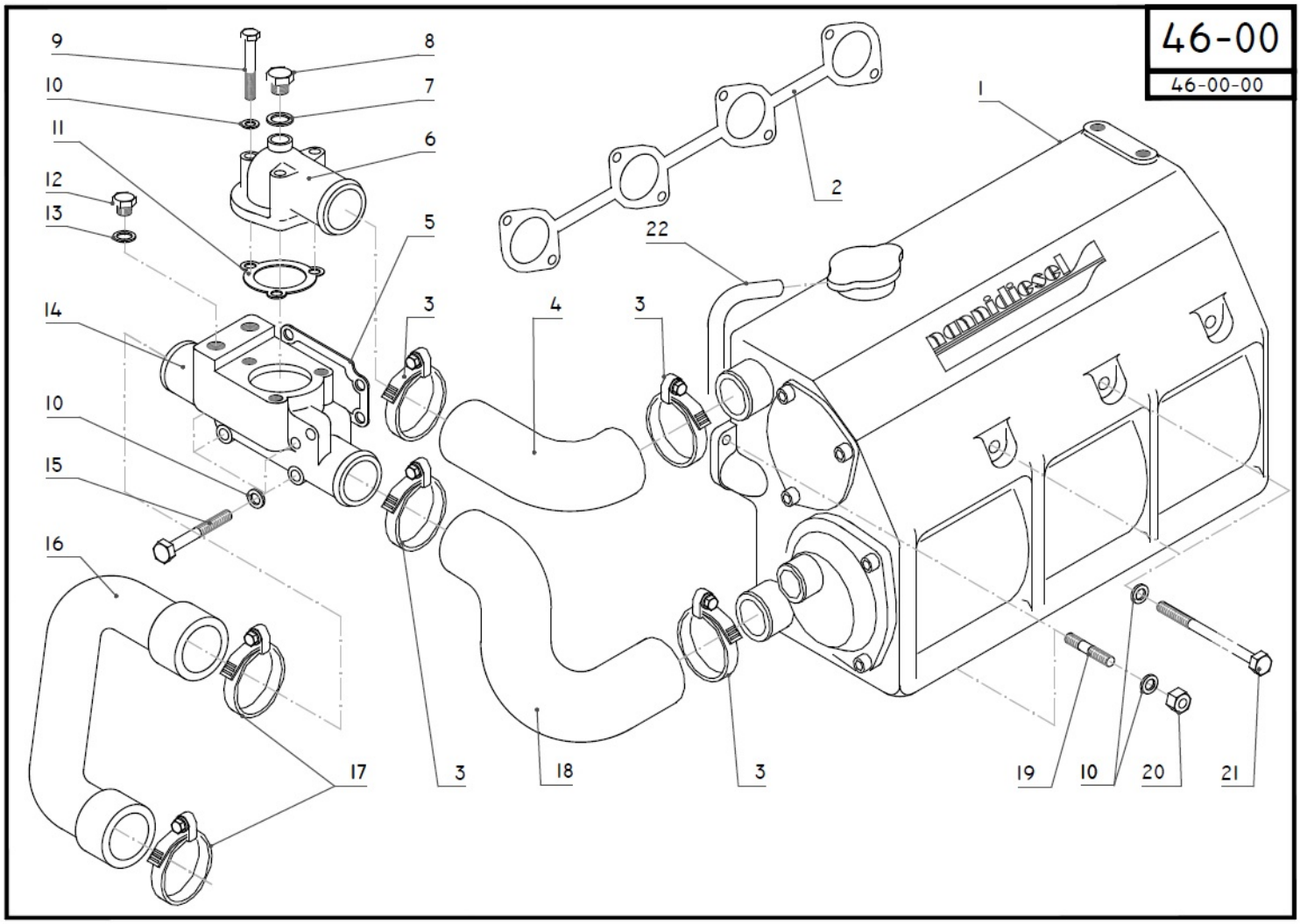

Part number	Item	Désignation article	Quantity
48300080	1	HOSE	1
970310727	2	GASKET	2
970634621	3	CLAMP,HOSE	3
48328073	4	HOSE	4
970310724	5	GASKET	5
970300306	7	GASKET,RING D14	7
970875506	8	PLUG	8
970034052	9	BOLT,HEX M 8X 45	9
970119139	10	WASHER,CORRUGATED D8	10
970310726	11	GASKET	11
970639853	12	""""PLUG,HEX 3/8""""""G""""	12
970300289	13	GASKET,RING D17	13
95710027	14	HOUSING	14
970300261	15	BOLT,HEX M 8X 80	15
48328079	16	HOSE	16
970634621	17	CLAMP,HOSE	17
48328074	18	HOSE	18
970312986	19	STUD	19
970300079	20	NUT,M 8 SPECIAL	20
39160243	21	BOLT	21

MOTEUR N4.140 STANDARD / SEA WATER PUMP

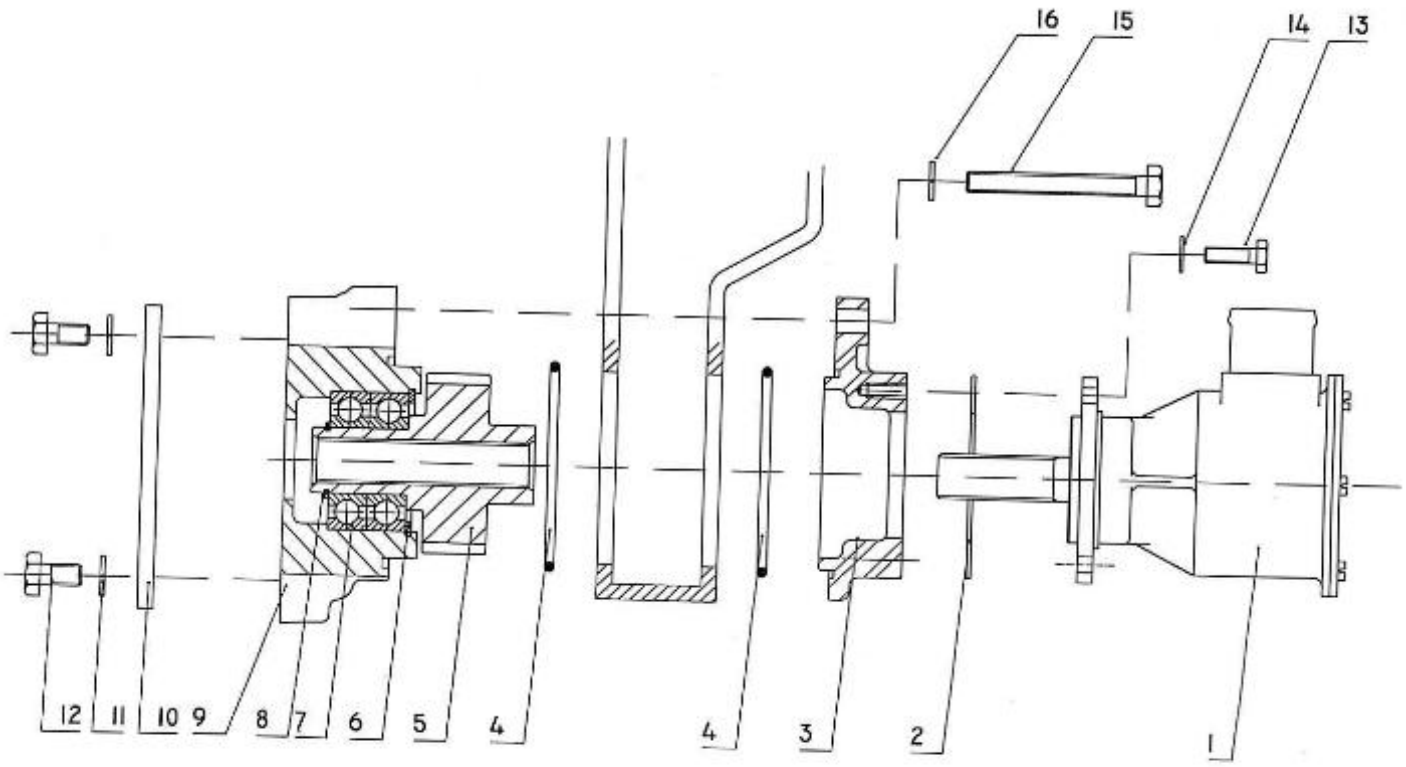

Part number	Item	Désignation article	Quantity
970316373	1	PUMP,WATER	1
970302683	2	GASKET,WATER PUMP	2
95710028	3	FLANGE	3
970311107	4	O-RING	4
970311108	5	GEAR, PTO PUMP	5
970311109	6	CIR-CLIP,INTERNAL	6
970311110	7	BEARING	7
970312517	8	CIR CLIP , EXTERNAL	8
970311112	9	PTO COVER	9
970119139	11	WASHER,CORRUGATED D8	11
970119141	12	BOLT,HEX M8X 20	12
970644006	13	BOLT,HEX M 6X 20	13
970609602	14	WASHER,CORRUGATED D 6	14
39160312	15	BOLT	15
970119139	16	WASHER,CORRUGATED D8	16

MOTEUR N4.140 STANDARD / SEA WATER PUMP - DETAILS

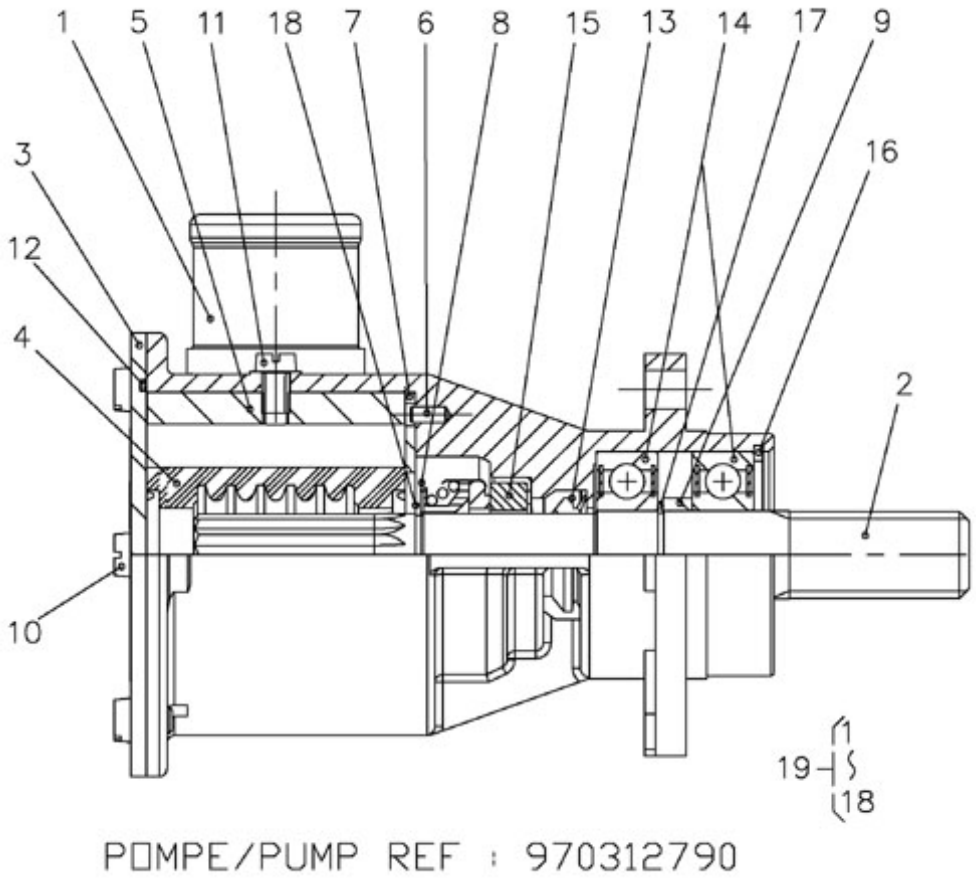

Part number	Item	Désignation article	Quantity
970315143	2	Shaft F7B-9	2
970313122	3	COVER	3
970544310	4	IMPELLER,WATER PUMP F 7B-803	4
970313139	5	CAM,WATER PUMP	5
970303675	6	PIN,WATER PUMP F5B-9000	6
970313125	7	SPACER	7
970313128	8	WASHER,WATER PUMP	8
970313134	9	SPACER	9
970312429	10	SCREW	10
970304048	11	SCREW,CAM WATER PUMP	11
970313123	12	GASKET	12
970313130	13	LIP SEAL	13
970312426	14	BALL BEARING	14
970313129	15	GASKET	15
970614627	16	RING,RETAINING	16
970304049	17	CIR-CLIP	17
970313127	18	CIRCLIPS	18

MOTEUR N4.140 STANDARD / INTAKE MANIFOLD

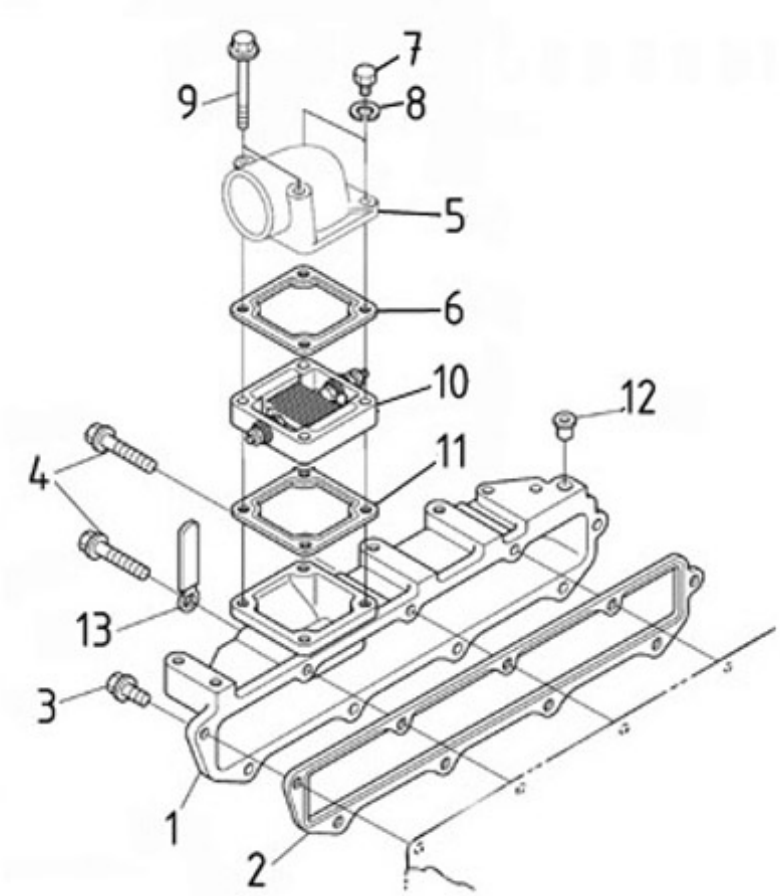

Part number	Item	Désignation article	Quantity
970313720	1	MANIFOLD,INLET	1
970313722	2	GASKET,IN-MANIFOLD	2
970313545	3	BOLT,FLANGE	3
970313723	4	BOLT,FLANGE	4
970313724	5	FLANGE,AIR CLEANER	5
970313725	6	GASKET,A/C FLANGE	6
970313726	7	BOLT	7
970490904	8	WASHER,SPRING D 8	8
970313728	9	BOLT,FLANGE	9
970313729	10	HEATER,INTAKE AIR	10
970313725	11	GASKET,A/C FLANGE	11
970313730	12	PLUG	12
970310781	13	CLAMP,CORD	13

MOTEUR N4.140 STANDARD / EXHAUST MIXER

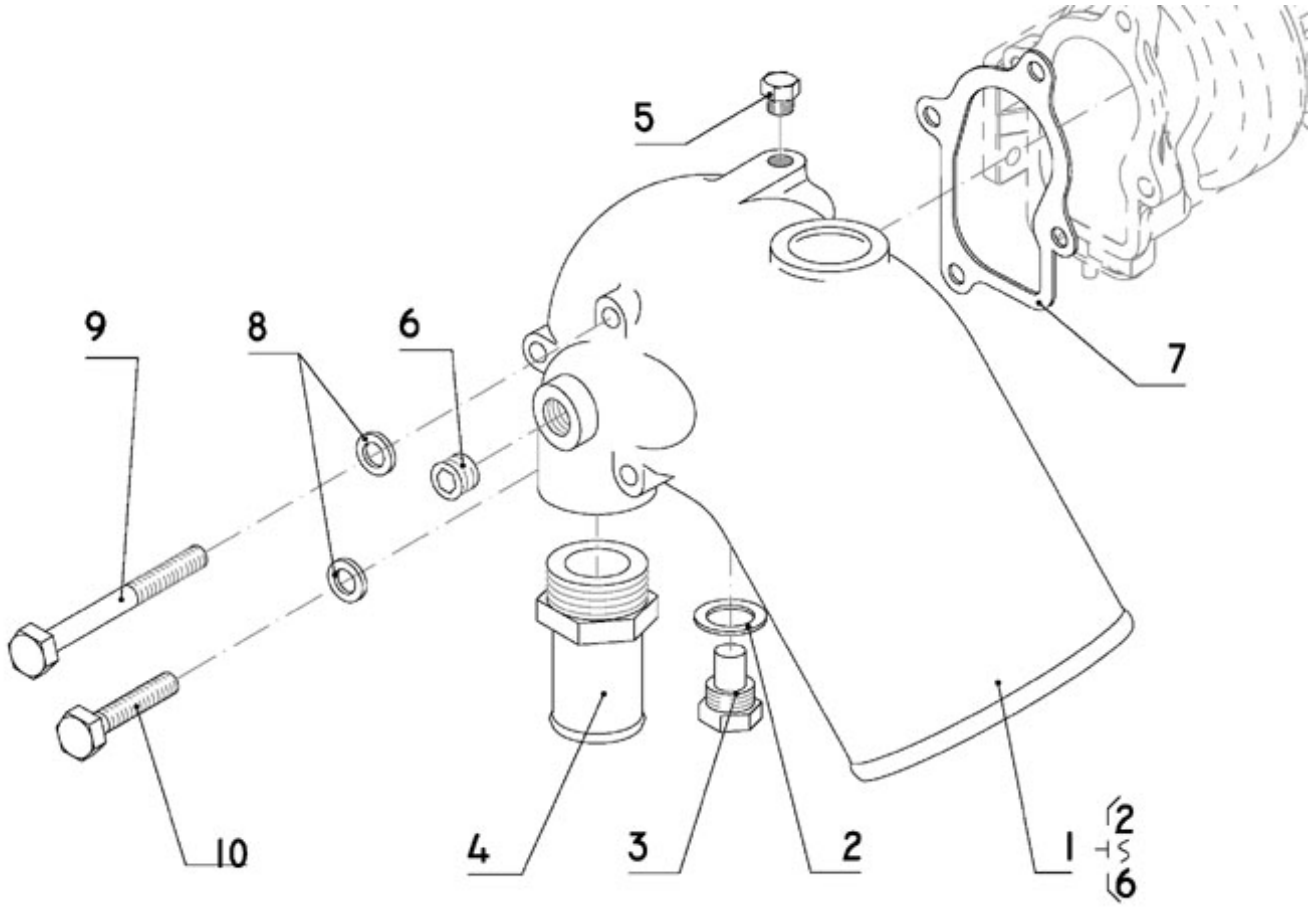

Part number	Item	Désignation article	Quantity
KP500U00	1	MIXER	1
970300199	2	GASKET,RING D16	2
970494635	3	ANODE,ZINC CPL M16X1,5	3
970892303	4	SOCKET,HOSE	4
970307265	5	PLUG,HEX 1/8	5
970310264	6	PLUG	6
970314995	7	GASKET	7
970119139	8	WASHER,CORRUGATED D8	8
39160455	9	BOLT	9
970647316	10	BOLT,HEX M 8X 35	10

MOTEUR N4.140 STANDARD / AIR COOLER

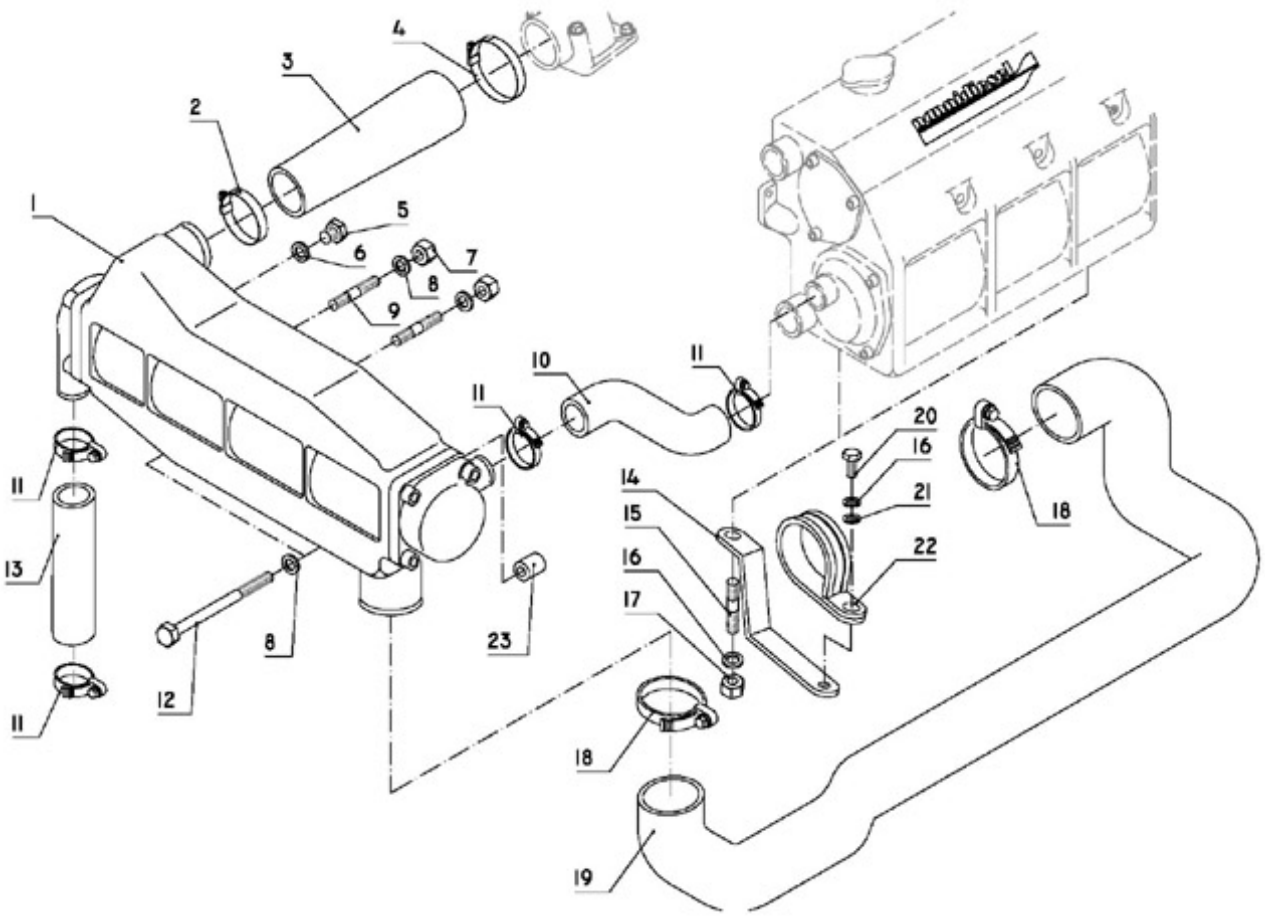

Part number	Item	Désignation article	Quantity
48300365	1	INTERCOOLER	1
970634621	2	CLAMP,HOSE	2
48328146	3	HOSE	3
970634620	4	CLAMP,HOSE 60-80	4
41169405	5	PLUG	5
970300430	6	GASKET,RING D10	6
970027322	7	NUT,M 8	7
970119139	8	WASHER,CORRUGATED D8	8
970300374	9	STUD,M 8X 30	9
48328076	10	HOSE	10
970300922	11	CLAMP,HOSE 26-38	11
970301703	12	BOLT,HEX M 8X160	12
32830001	13	PIPE	13
95310425	14	SUPPORT,PIPE CLAMP	14
970300080	15	STUD,M 8X 25	15
970119138	16	WASHER,SPRING D 8	16
970027322	17	NUT,M 8	17
970300071	18	CLAMP,HOSE 50-65	18
48328075	19	HOSE	19
970119141	20	BOLT,HEX M8X 20	20
970027323	21	WASHER,PLAIN D 8	21
48100794	22	CLAMP	22
43320275	23	SPACER	23

MOTEUR N4.140 STANDARD / AIR COOLER - DETAILS

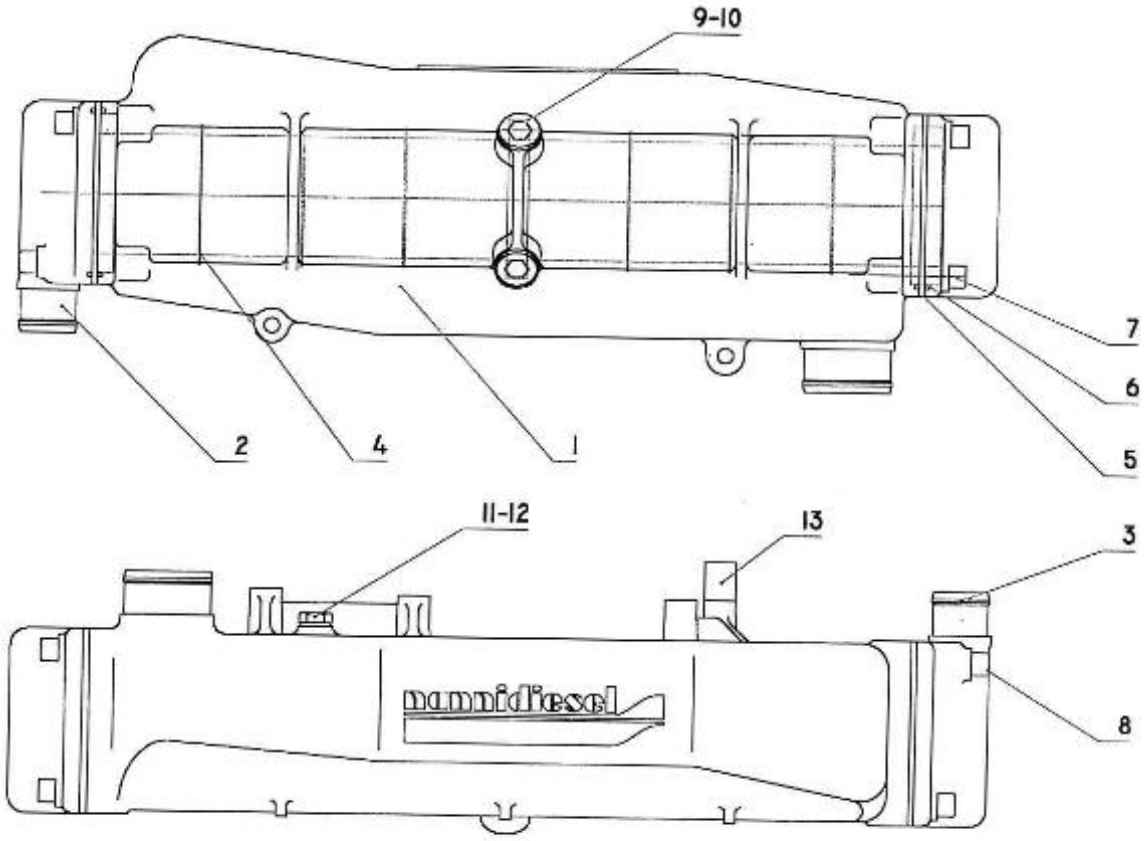

Part number	Item	Désignation article	Quantity
970310750	4	TUBE STACK	4
970310553	5	SPACER	5
970310554	6	O-RING	6
970310755	7	BOLT	7
970310756	8	BOLT	8
970310555	9	CAP,FREEZE	9
970310556	10	BALL	10
970875506	11	PLUG	11
970300430	12	GASKET,RING D10	12
43320275	13	SPACER	13

MOTEUR N4.140 STANDARD / OIL DRAIN PUMP

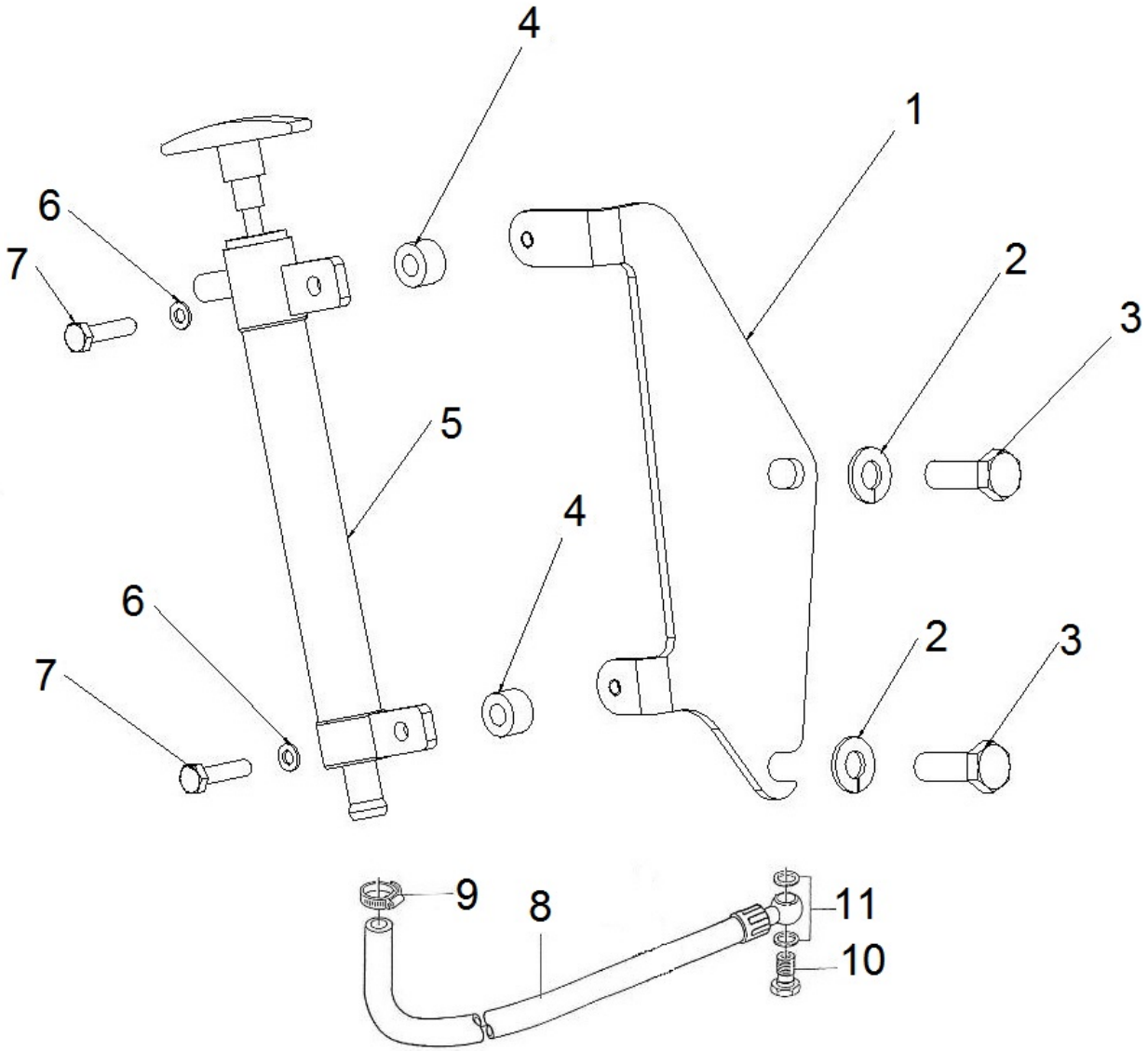

Part number	Item	Désignation article	Quantity
970119136	2	WASHER,SPRING D10	2
970499051	3	BOLT,HEX M10X1,25X 30	3
970300375	4	SPACER	4
970439302	5	PUMP,OIL EXTRACTION	5
39780	6	WASHER	6
970300275	7	BOLT,HEX M 6X 25	7
970439306	9	CLAMP	9
970312248	10	BOLT, UNION	10
970300325	11	RING,SEAL D12	11

MOTEUR N4.140 STANDARD / STATER - DETAILS

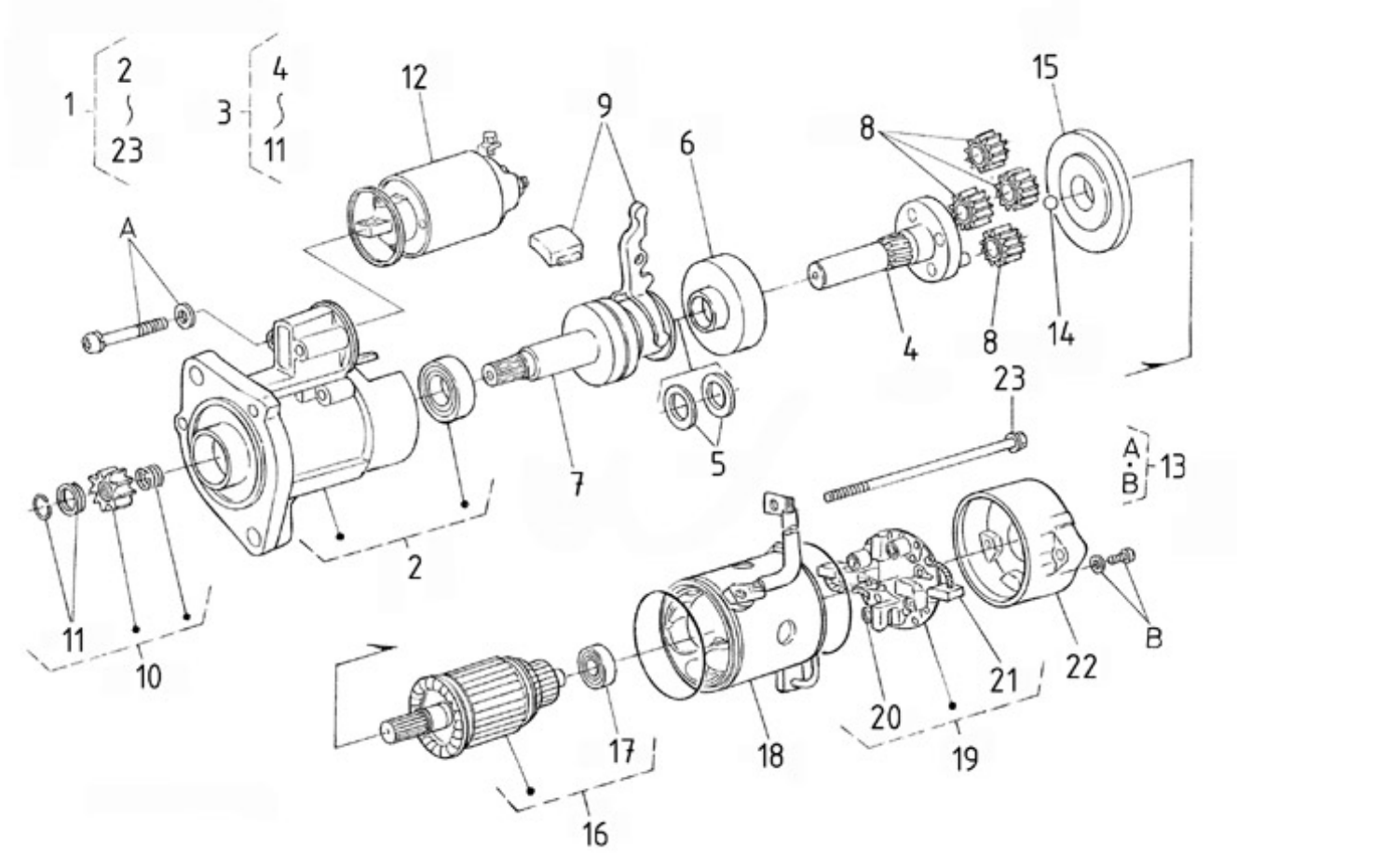

Part number	Item	Désignation article	Quantity
970313673	1	ASSY STARTER	1
970313678	2	ASSY BRACKET,FRONT	2
970313679	3	ASSY SHAFT,CLUTCH	3
970313680	4	ASSY SHAFT,GEAR	4
970310974	5	SET WASHER	5
970310975	6	SET GEAR	6
970310976	7	CLUTCH,OVERRANNING	7
970310977	8	ASSY GEAR	8
970313681	9	ASSY LEVER,SET	9
970313682	10	SET PINION	10
970310980	11	SET STOPPER	11
970310981	12	HOLDER,MAGNETIC SWITCH	12
970313683	13	SET, SCREW	13
970310983	14	BALL	14
970310984	15	SET PACKING	15
970313684	16	ASSY ARMATURE	16
970310986	17	BEARING	17
970313685	18	ASSY YOKE	18
970313686	19	ASSY HOLDER,BRUSH	19
970313687	20	BRUSH,SPRING	20
970313688	21	BRUSH	21
970313689	22	ASSY BRACKET,REAR	22
970313690	23	SET,BOLT	23

MOTEUR N4.140 STANDARD / STARTER

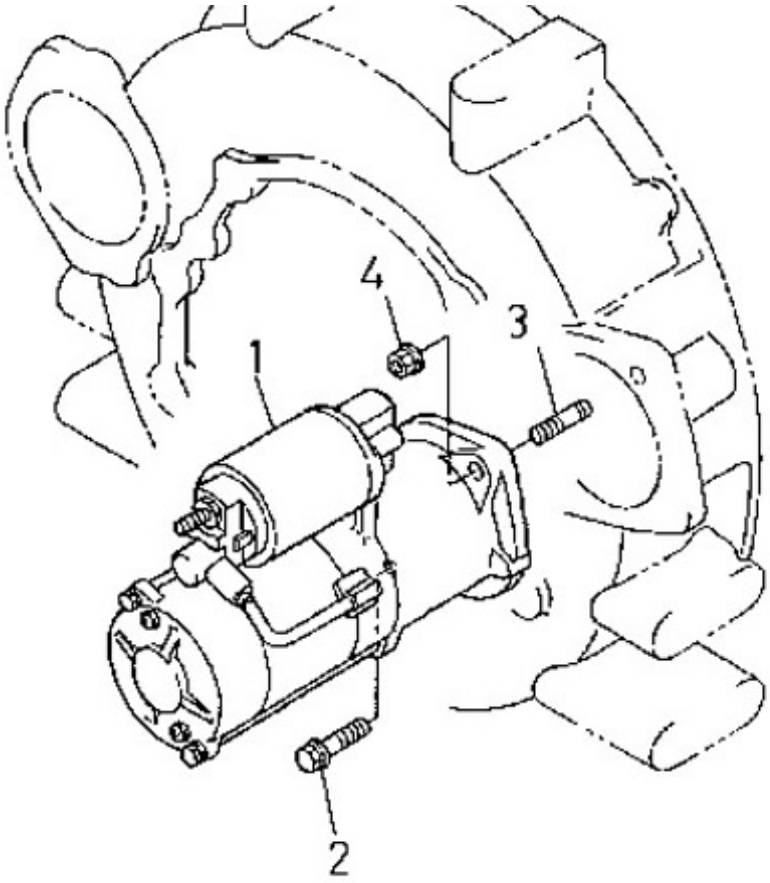

Part number	Item	Désignation article	Quantity
970313673	1	ASSY STARTER	1
970313674	2	BOLT,FLANGE	2
970313675	3	STUD	3
39460917	4	NUT,FLANGE	4

MOTEUR N4.140 STANDARD / ALTERNATOR

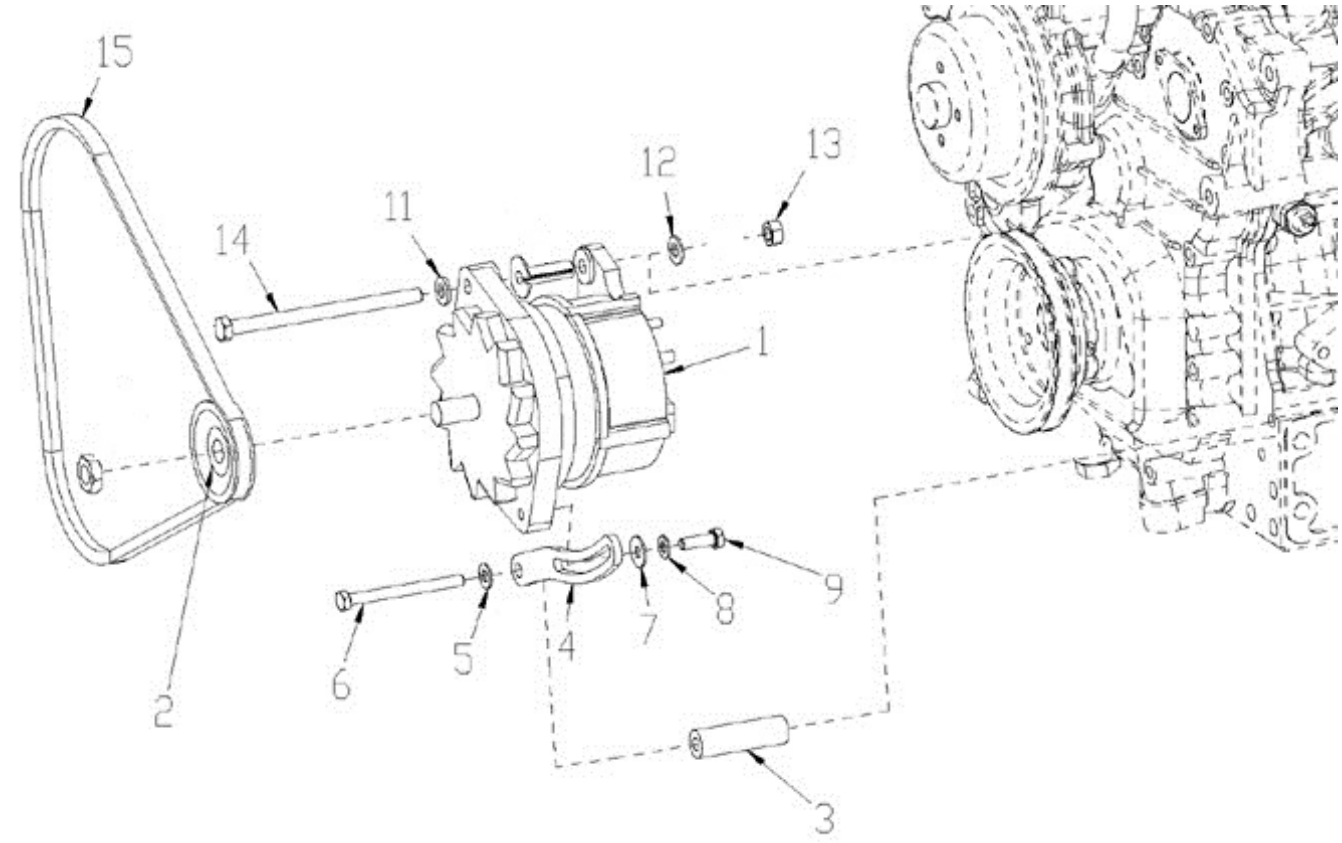

Part number	Item	Désignation article	Quantity
95312336	2	PULLEY	2
43320308	3	SPACER	3
970310736	4	TIGHTENER,V-BELT	4
970119138	5	WASHER,SPRING D 8	5
970301280	6	BOLT,HEX M 8X 90	6
970304050	7	WASHER	7
970119138	8	WASHER,SPRING D 8	8
970024016	9	BOLT,HEX M 8X 40	9
970119137	11	WASHER,CORRUGATED D10	11
970119135	12	WASHER,PLAIN D10	12
39460920	13	NUT	13
39160453	14	BOLT	14
48108141	15	V BELT	15

MOTEUR N4.140 STANDARD / ELECTRICAL STOP

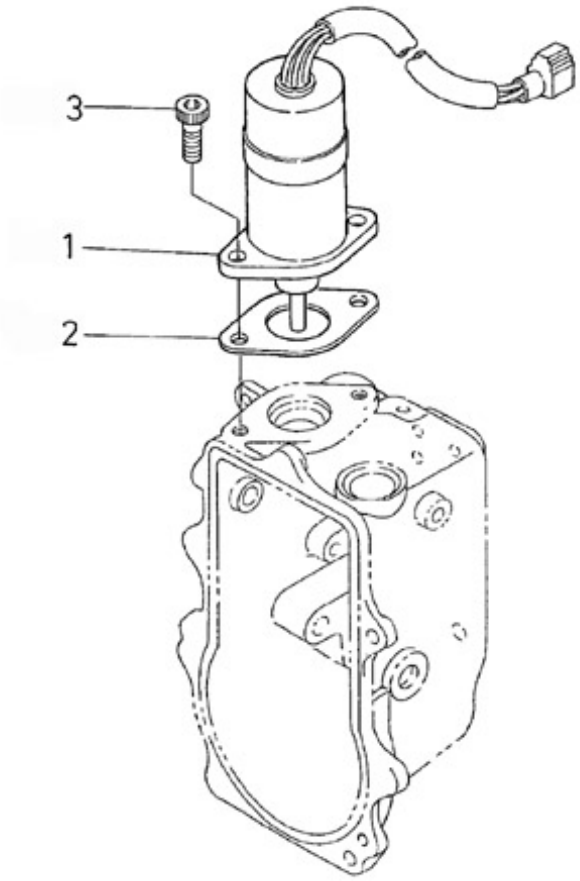

Part number	Item	Désignation article	Quantity
970302869	1	SOLENOID,STOP 4.150	1
970302870	2	GASKET,SOLENOID	2
970313597	3	BOLT,HEX-SOC-HD	3

MOTEUR N4.140 STANDARD / ELECTRICAL EQUIPMENTS

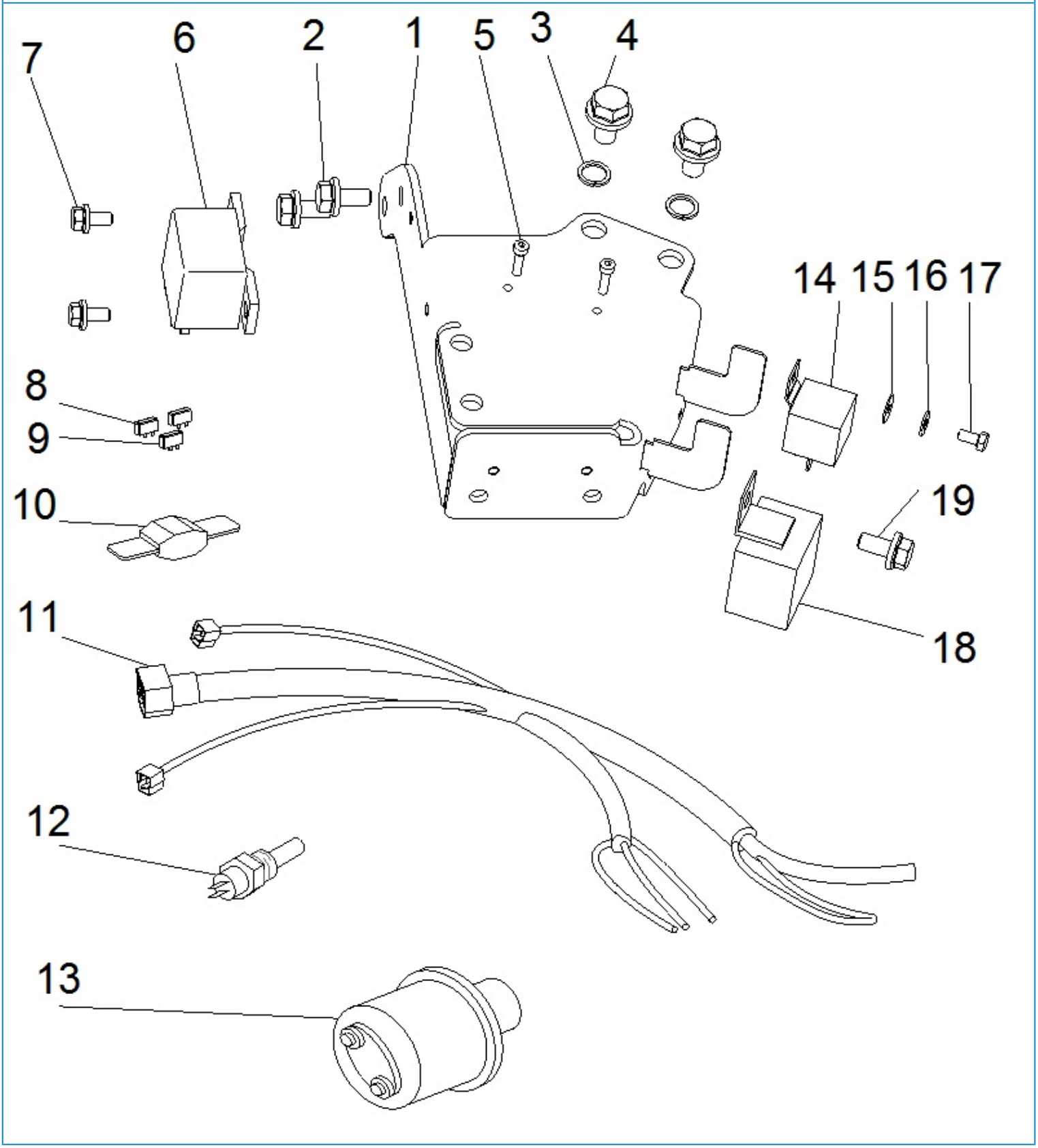

Part number	Item	Désignation article	Quantity
39160662	2	BOLT	2
970119136	3	WASHER,SPRING D10	3
39160463	4	BOLT,HEX M10X1,25X 25	4
970300715	6	RELAIS,12V-75A BOSCH	6
39160735	7	BOLT	7
48201348	8	FUSE 15 AMP	8
970851602	12	WATER TEMPERATURE SENDER	12
48201143	13	OIL PRESSURE SENDER	13
970300716	14	RELAY,12V-30A	14
970300318	16	WASHER,SPRING D 5	16
39160222	17	BOLT	17
48201066	18	RELAY	18
39160661	19	BOLT	19

MOTEUR N4.140 STANDARD / GEAR BOX FLANGE

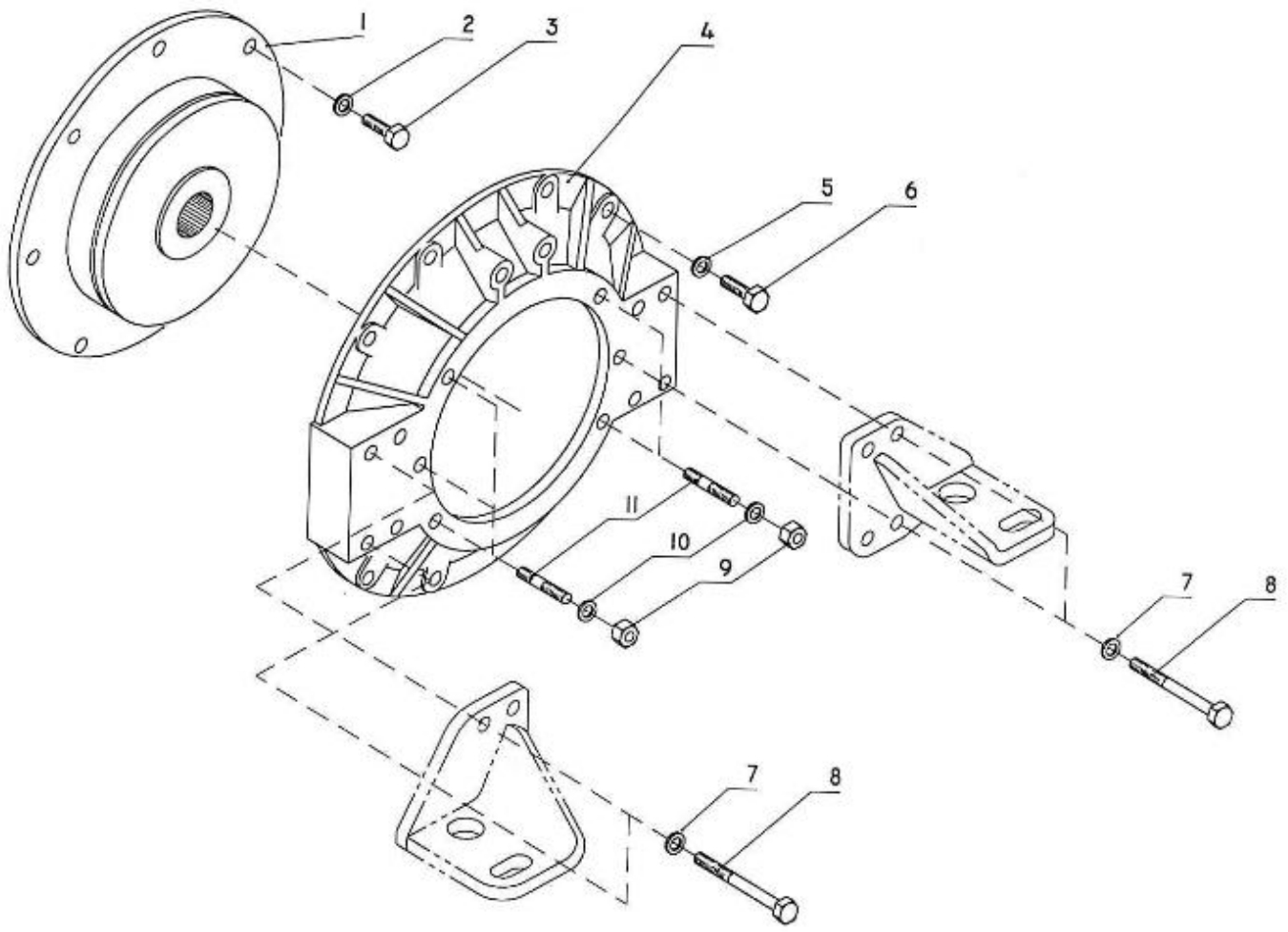

Part number	Item	Désignation article	Quantity
970311163	1	COUPLING	1
970119137	2	WASHER,CORRUGATED D10	2
39160463	3	BOLT,HEX M10X1,25X 25	3
95200226	4	HOUSING	4
970119137	5	WASHER,CORRUGATED D10	5
970499051	6	BOLT,HEX M10X1,25X 30	6
970119136	7	WASHER,SPRING D10	7
39160462	8	BOLT	8
970119143	9	NUT, M10	9
970119137	10	WASHER,CORRUGATED D10	10
970649725	11	STUD	11

MOTEUR N4.140 STANDARD / GEAR BOX OIL COOLER

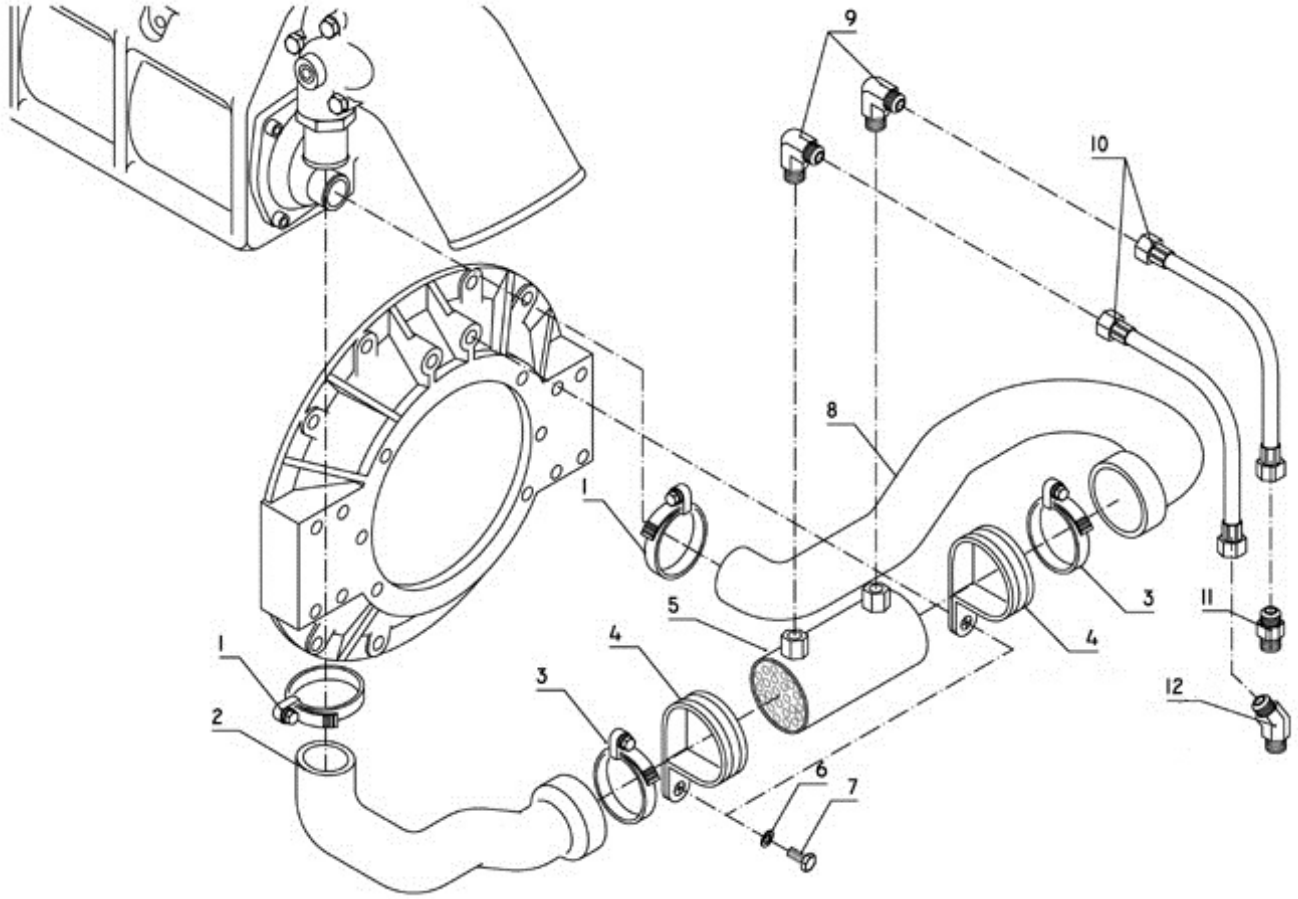

Part number	Item	Désignation article	Quantity
970300922	1	CLAMP,HOSE 26-38	1
48328078	2	HOSE	2
970634621	3	CLAMP,HOSE	3
48100189	4	CLAMP	4
970310247	5	OIL COOLER	5
970119135	6	WASHER,PLAIN D10	6
970635508	7	BOLT,HEX M10X 25	7
48328077	8	HOSE	8
48300035	9	ELBOW 92	9
48300080	10	HOSE	10
48300084	11	ELBOW	11
48300031	12	ELBOW 45	12

MOTEUR N4.140 STANDARD / SUPPORT AND MOUNTING

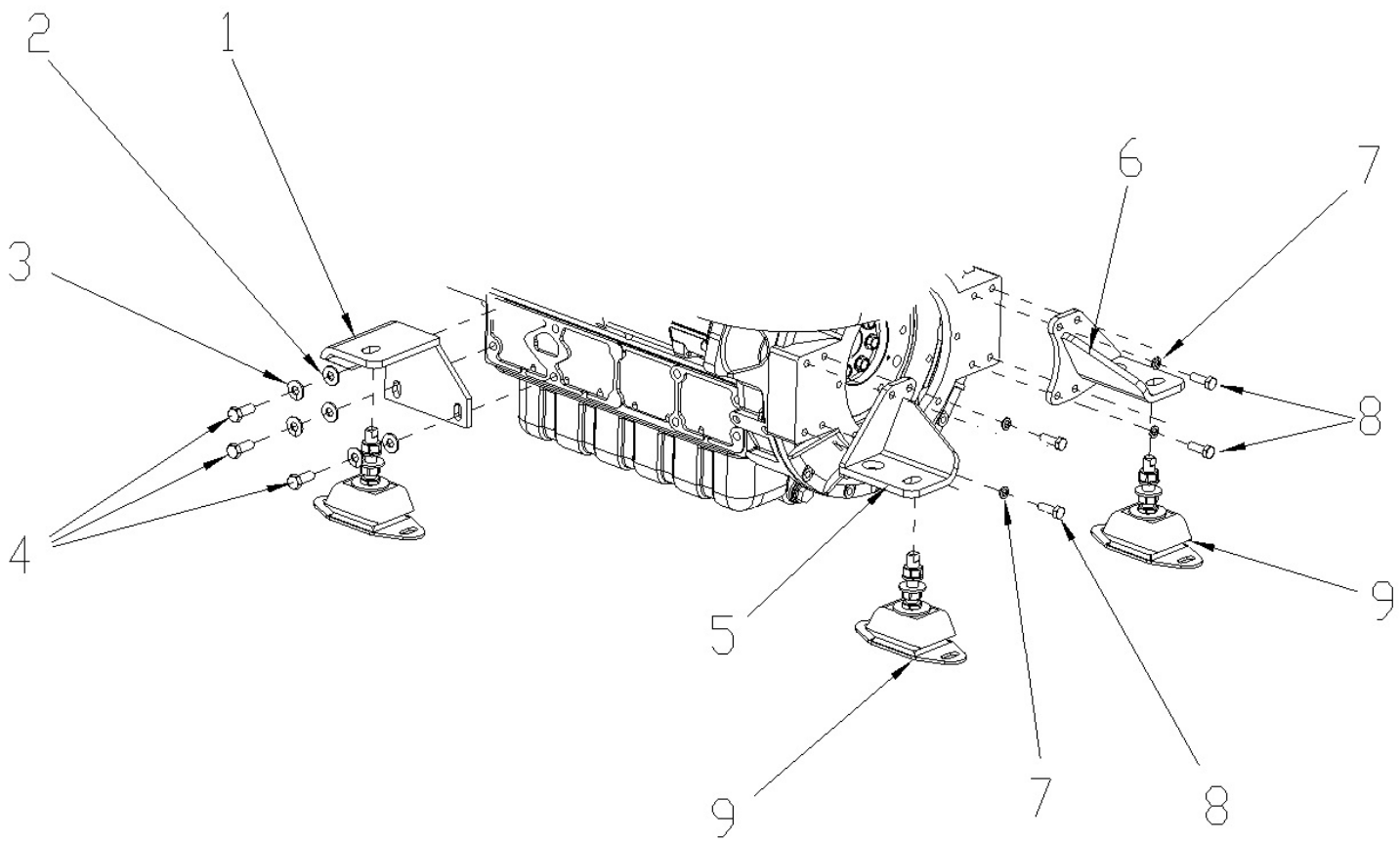

Part number	Item	Désignation article	Quantity
95310404	1	ENGINE MOUNT	1
970409153	2	WASHER,PLAIN D12	2
970409154	3	WASHER,SPRING D12	3
970301736	4	BOLT,HEX M12X1,25X 30	4
95310405	5	ENGINE MOUNT	5
95310406	6	ENGINE MOUNT	6
970119136	7	WASHER,SPRING D10	7
970649721	8	BOLT,HEX M10X 30	8
TP600V13	9	RUBBER MOUNT 55 SH + ECROU DE REGLAGE	9